Power Distribution Enclosure Kit
5 Motor - #1870196
(Shown) 15 Motor - #1870197
10 Motor - #1870192
20 Motor - #1870198

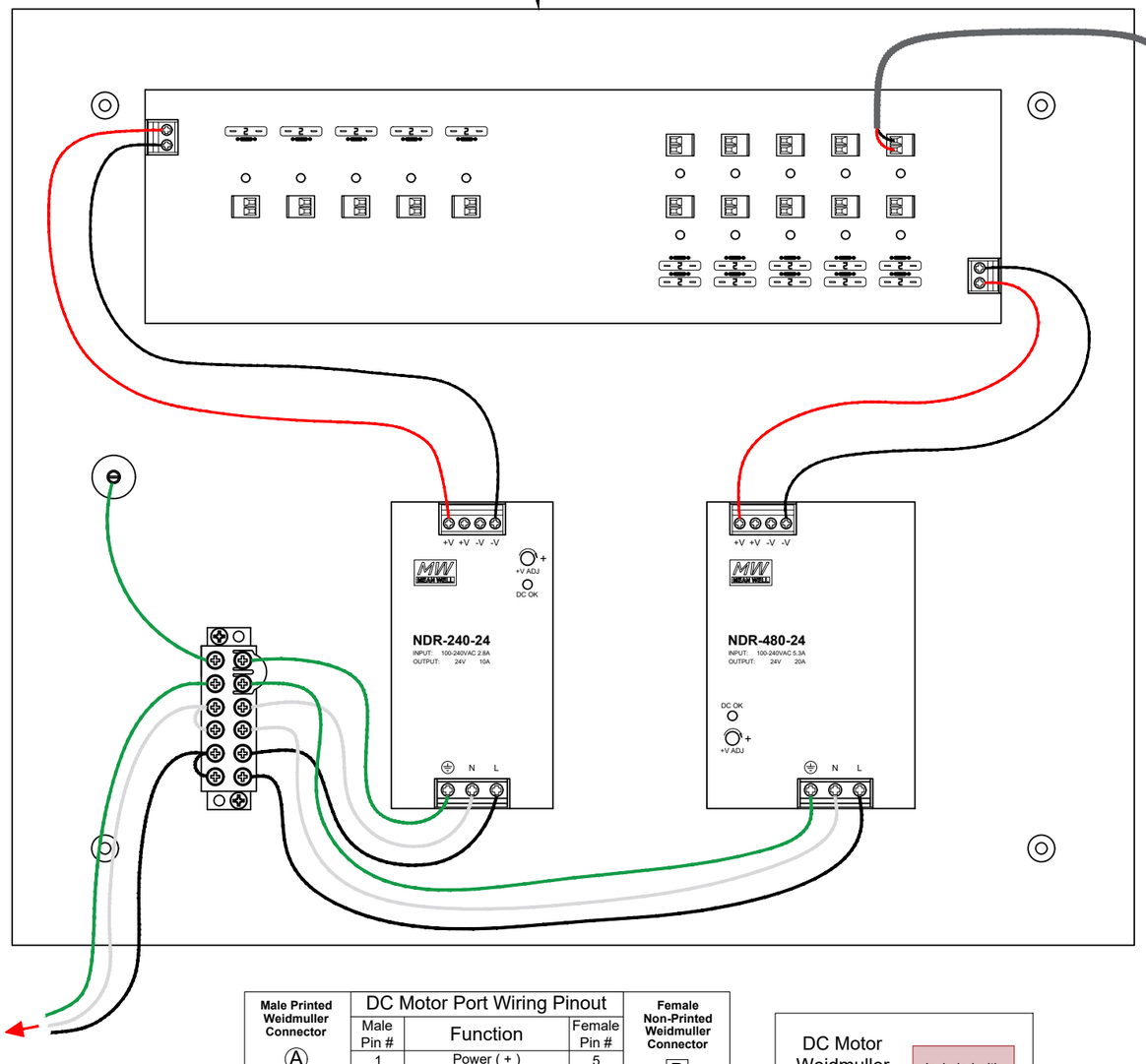

SDN Bus Wiring Pinout		
CAT-5e or higher TIA-568B standard with RJ-45		
Pin #	Color	Function
1	Orange White	SDN RS485 (+)
2	Orange	SDN RS485 (-)
3	Green White	Reserved
4	Blue	Power 24v DC
5	Blue White	Power 24v DC
6	Green	Reserved
7	Brown White	SDN RS485 Ground
8	Brown	SDN RS485 Ground

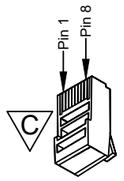

HARDWIRED TO SONESSE® 30 RS485 24V DC MOTOR

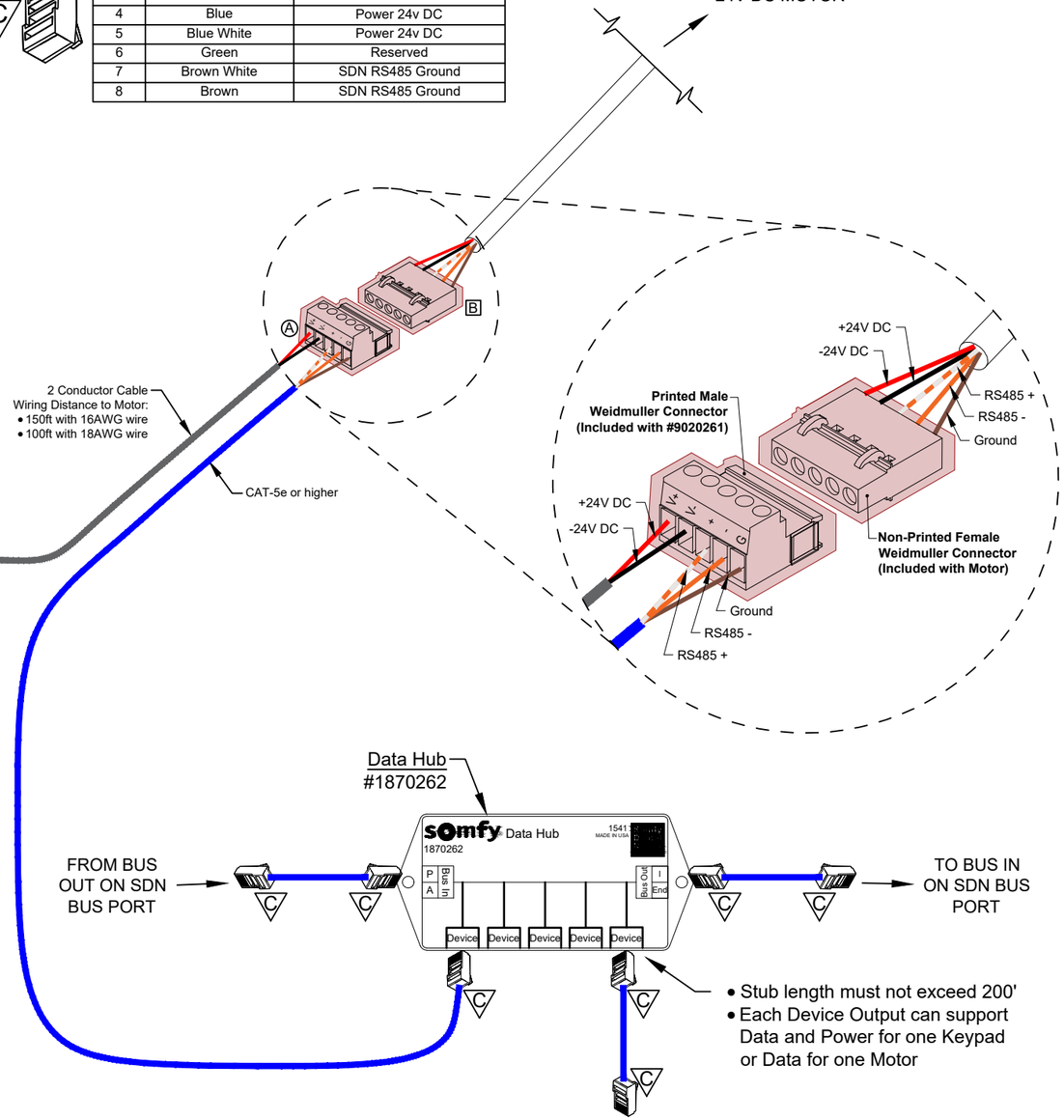

Male Printed Weidmuller Connector (A)	DC Motor Port Wiring Pinout		Female Non-Printed Weidmuller Connector (B)
	Male Pin #	Function	Female Pin #
1 2 3 4 5	1	Power (+)	5
	2	Power (-)	4
	3	SDN RS485 (+)	3
	4	SDN RS485 (-)	2
	5	SDN RS485 Ground	1

DC Motor Weidmuller Connector Color Code — Included with DC Motor Cable

© 2015 Somfy Systems, Inc. All Rights Reserved. This drawing is the property of Somfy Systems, Inc.. The graphics, information and specific ideas in this document are the exclusive property of Somfy Systems, Inc. and must not be made public, copied, or sold. Others seeking permission to reproduce this document, in whole or in part, must obtain permission from Somfy Systems, Inc. in writing.

Tel: 1-800-64-SOMFY
Fax: 1-609-495-8165
www.somfysystems.com

somfy®

Date:	06/20/24
Print Size:	11" x 17"
NTS:	NTS
Sales:	N/A
Drawn by:	RV
Checked by:	PK

Revisions			
Rev	Date	By	Description
-	--/--/--	-	
-	--/--/--	-	
-	--/--/--	-	
-	--/--/--	-	
-	--/--/--	-	

Dwg Title: ST30 V2 RS485 to Power Distribution Enclosure Kit Wire Detail

Dwg No.: PDEK-WIRING-03

Project name: Technical Library

Client: Somfy Systems

Address: 121 Herrod Boulevard
Dayton, NJ 08810