TO
ST-30 RTS
MOTOR

Sonesse 30 DC RTS
Power Pigtail #9020260
(Included with Motor)

2-Conductor Cable

ST-30 Motor Head Power Pinout		
Pin #	Function	Color
1	Power (+)	White / Black
2	Power (-)	White

Pin 1 Pin 2

Power Distribution Enclosure Kit
5 Motor - #1870196
15 Motor - #1870197
10 Motor - #1870192
(Shown) 20 Motor - #1870198

Wiring Distance to Motor
• 150ft with 16AWG wire
• 100ft with 18AWG wire

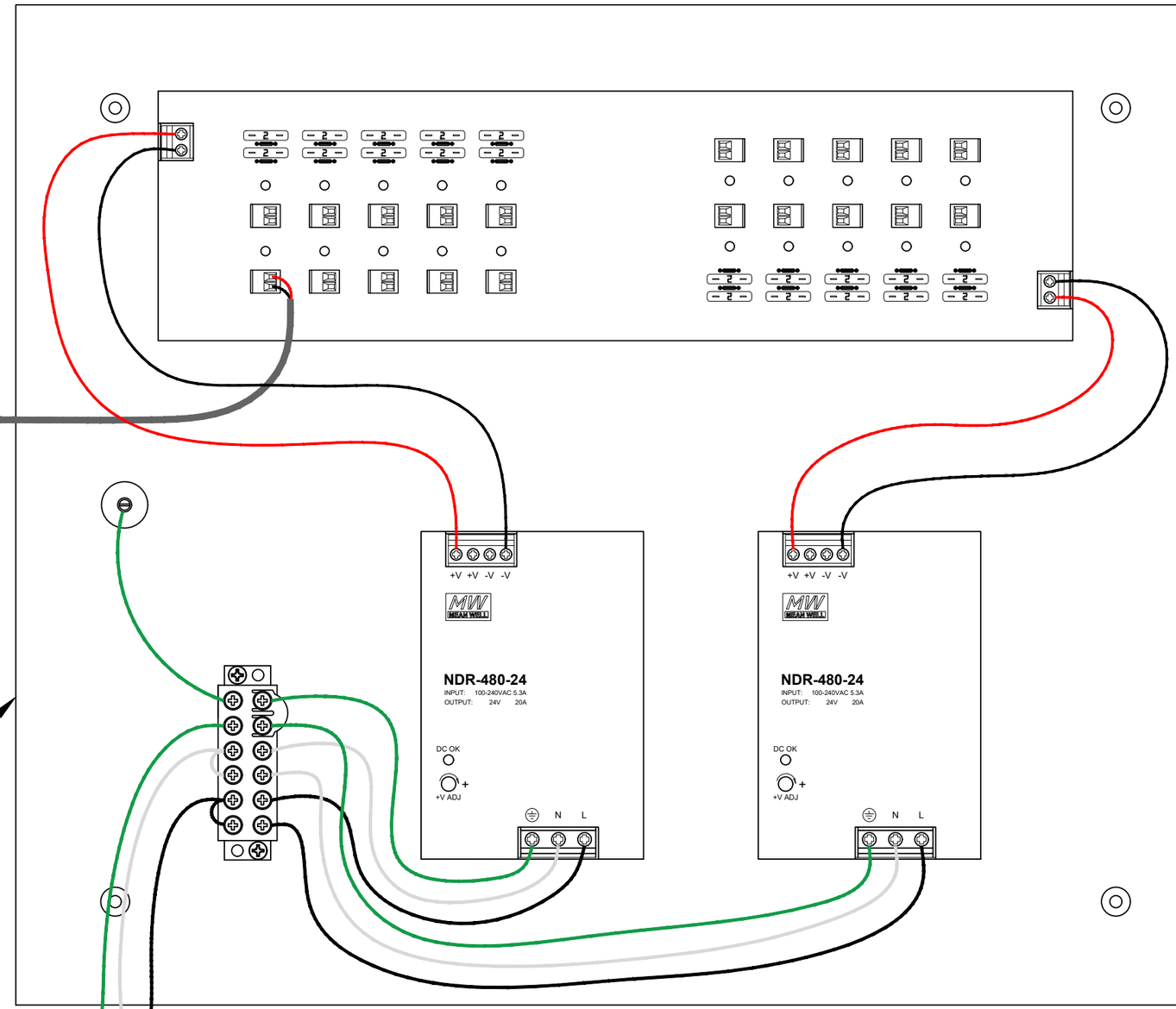

© 2015 Somfy Systems, Inc. All Rights Reserved. This drawing is the property of Somfy Systems, Inc.. The graphics, information and specific ideas in this document are the exclusive property of Somfy Systems, Inc. and must not be made public, copied, or sold. Others seeking permission to reproduce this document, in whole or in part, must obtain permission from Somfy Systems, Inc. in writing.

Tel: 1-800-64-SOMFY
Fax: 1-609-495-8165
www.somfysystems.com

somfy®

Date:	06/20/24
Print Size:	11" x 17"
NTS:	NTS
Sales:	N/A
Drawn by:	RV
Checked by:	PK

Revisions			
Rev	Date	By	Description
-	--/--/--	-	
-	--/--/--	-	
-	--/--/--	-	
-	--/--/--	-	
-	--/--/--	-	

Dwg Title: ST-30 RTS to Power Distribution Enclosure Kit Wire Detail

Dwg No.: PDEK-WIRING-02

Project name: Technical Library

Client: Somfy Systems

Address: 121 Herrod Boulevard
Dayton, NJ 08810