

COMMERCIAL & INDUSTRIAL CLOSURES

Tubular motors
T8S AND T8S DMI

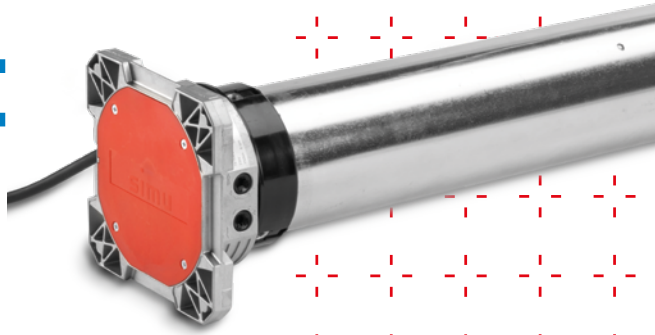

INNOVATION AND TECHNOLOGY CONCENTRATED
IN ONLY 43 MM!

- **Very flexible installation process** thanks to the adjustable support and the narrowest head on the market, only 43mm.
- **Intuitive and secured** manual override operation.
- **Easy integration** thanks to the standardization of components.
- **Up to 300Nm,** in single-phase current.

simu

The T8S motor makes integration and installation easier

43 MM HEAD, THE NARROWEST ON THE MARKET

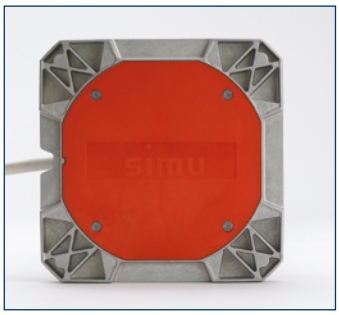

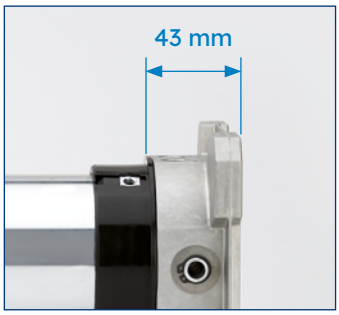

- For use on a standard 50mm post.
- Allows use of cased tracks, so no need to install a post.
- Identical dimensions, with or without manual override.
- Makes entrances more attractive with wider access.

MOTOR CAN BE INSTALLED IN ANY POSITION

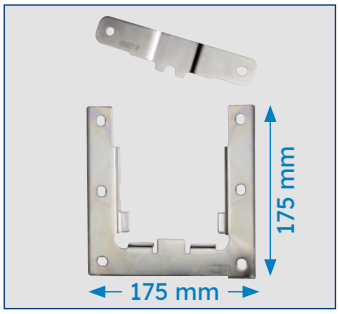

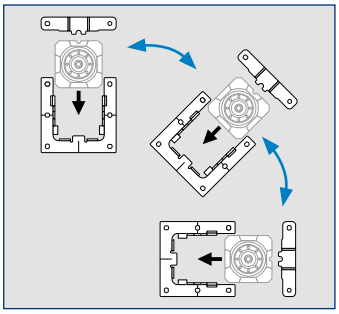

Adjustable support.
- Shaft inserted from the top or in the front
- 4 installation positions with the square head
- Motor can be angled up to 45°
- Practical fixing of the support
- Tolerates misalignment in installation, and gives freedom of movement to the motorised shaft.

EASY ACCESS TO LIMIT STOP ADJUSTMENT

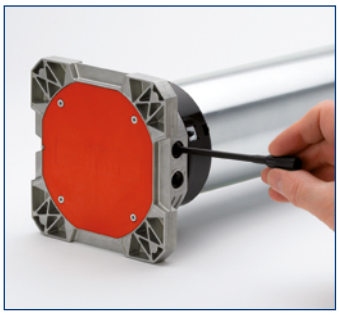



- Whatever the position of the head of the motor.
- Conical-tip adjustment screw, for easy insertion of the clippable adjusting tool supplied.

THE T8S MOTOR FITS ALL TYPES OF INSTALLATIONS

INSTALLATION BETWEEN WALLS

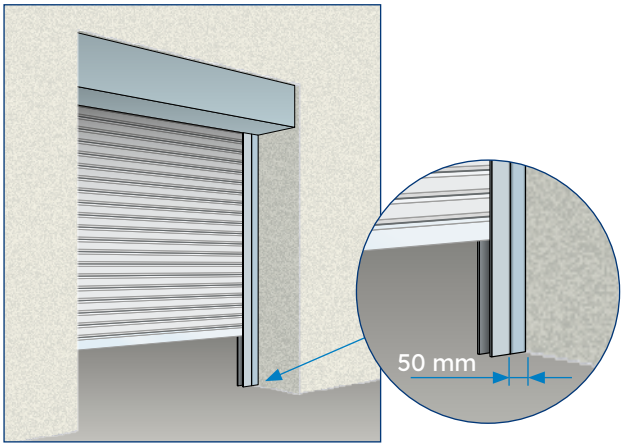

SURFACE-MOUNTED INSTALLATION

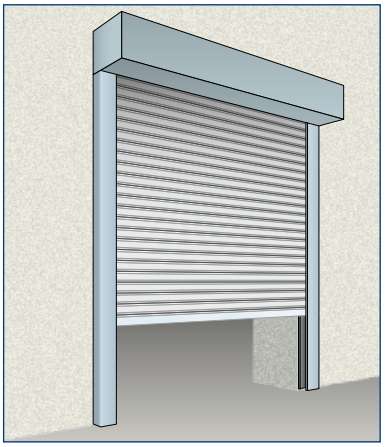

A manual override system unique on the market

CROSSPIECE MANUAL OVERRIDE WITH DIRECT DRIVE

No need to pull or push.
- Allows use of roller shutters accessories (7mm hexagonal or 6mm square).
- No recutting to the length of the accessory rod.
- Allows use of angle transmissions and other systems.

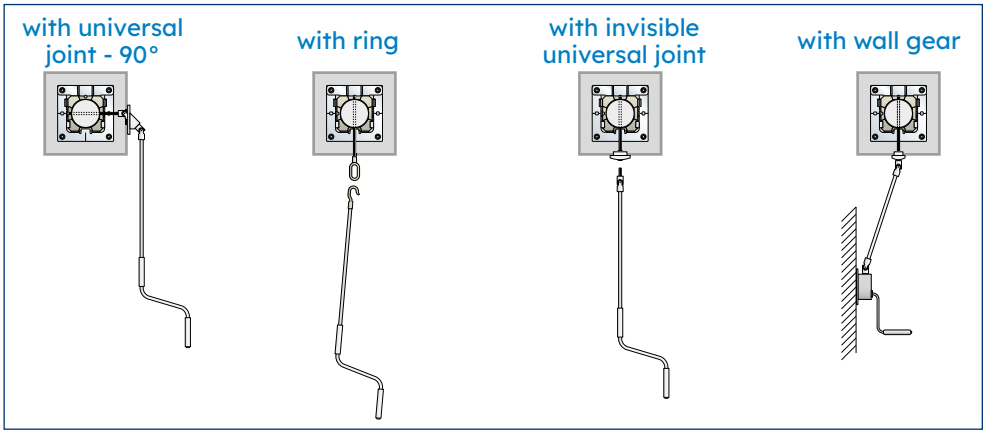

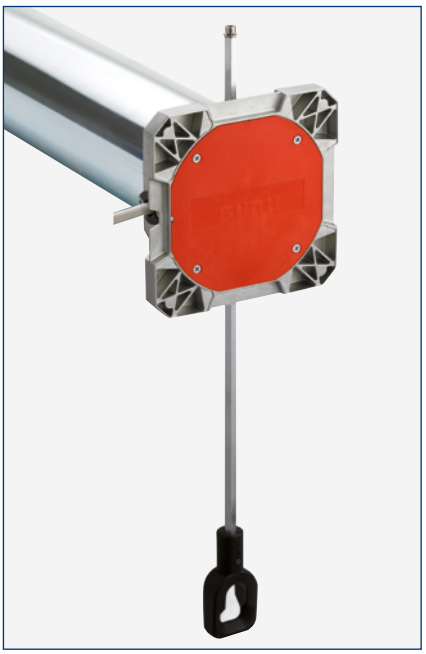

EASY AND QUICK TO OPEN



- Intuitive manual override, no need to pull on the ring or the shaft.
- Automatic reset of manual override after use.
- The operation immediately reassures the user, with visible movement of the shutter as soon as the manual override is operated.

USER PROTECTION

- The torque limit protects the user, preventing the shutter from dropping when the manual override is actuated, in the event of a simultaneous jamming of the safety brake, and a power failure.

OPTIMIZED PACKAGING, A + BY SIMU

- Packaging adapted to individual needs: single units or in 10s.
- Cardboard packaging, no polystyrene, easy to recycle.
- Reusable packaging wedges to protect the motor heads during transport to the installation site.

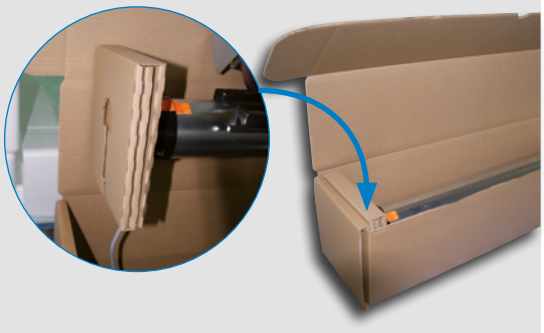

Specifications

PRODUCT WARRANTY 5 YEARS

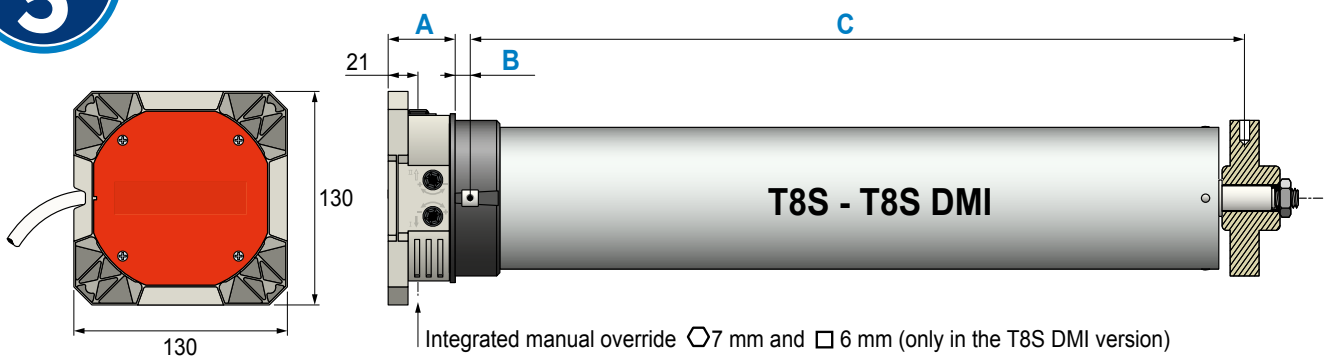

DESCRIPTION	WITHOUT MANUAL OVERRIDE	WITH MANUAL OVERRIDE	LENGTH		
			A	B	C
T8S	x		43 mm* 49 mm**	8 mm* 18 mm**	609 mm* 595 mm**
T8S DMI		x	43 mm* 49 mm**	8 mm* 18 mm**	659 mm* 645 mm**

* Length with adaptor < 119 mm // ** Length with adaptor ≥ 119 mm

THERMAL CUT-OUT	4 minutes
T8S DMI REDUCTION RATIO	of the manual override: 190/1
PROTECTION INDEX	IP 44
AMBIENT WORKING TEMPERATURE	-10°C to +40°C and, exceptionally, -20°C to +60°C standard temperature range +5°C to +40°C
230V POWER CABLE	2.5 metres (4x0.75mm² wires, black H05 RRF)
220V POWER CABLE	2.5 metres (4x0.75mm² wires, black H05 RRF)
120V POWER CABLE	0.7 metres (4xAWG19 wires, white 05 VV-F)
CYCLES PER DAY	10 cycles, non consecutive
WINDING TUBE	compatible with tubes from 100 x 2 mm

References

230V - 50HZ POWER SUPPLY

DESCRIPTION	TORQUE	POWER	CURRENT	SPEED	END-LIMIT CAPACITY	BASE DIAMETER	WEIGHT	REFERENCES	
								WITHOUT SAFETY END-LIMIT	**WITH** SAFETY END-LIMIT
T8S 150	150 Nm	500 W	2.2 A	8 rpm	17 rounds	94 mm	9.5 Kg	**2008290**	**2008276**
T8S 200	200 Nm	550 W	2.4 A	8 rpm	17 rounds	94 mm	11 Kg	**2008291**	**2008277**
T8S 250	250 Nm	710 W	3.2 A	8 rpm	17 rounds	94 mm	11.5 Kg	**2008292**	**2008278**
T8S 300	300 Nm	855 W	3.9 A	8 rpm	17 rounds	94 mm	12 Kg	-	**2008279**
T8S DMI 150	150 Nm	500 W	2.2 A	8 rpm	17 rounds	94 mm	11 Kg	**2008304**	**2008280**
T8S DMI 200	200 Nm	550 W	2.4 A	8 rpm	17 rounds	94 mm	12.5 Kg	**2008305**	**2008281**
T8S DMI 250	250 Nm	800 W	3.6 A	8 rpm	17 rounds	94 mm	13 Kg	**2008306**	**2008282**
T8S DMI 300	300 Nm	855 W	3.9 A	8 rpm	17 rounds	94 mm	13.5 Kg	**2008307**	**2008283**

120V - 60HZ POWER SUPPLY

DESCRIPTION	TORQUE	POWER	CURRENT	SPEED	END-LIMIT CAPACITY	BASE DIAMETER	WEIGHT	REFERENCES
								WITH SAFETY END-LIMIT
T8S 200	200 Nm	620 W	5.3 A	10 rpm	17 rounds	94 mm	11 Kg	**2008288**
T8S 280	280 Nm	820 W	6.9 A	10 rpm	17 rounds	94 mm	12 Kg	**2008289**
T8S DMI 200	200 Nm	620 W	5.3 A	10 rpm	17 rounds	94 mm	12.5 Kg	**2008302**
T8S DMI 280	280 Nm	820 W	6.9 A	10 rpm	17 rounds	94 mm	13.5 Kg	**2008303**

220V - 60HZ POWER SUPPLY

DESCRIPTION	TORQUE	POWER	CURRENT	SPEED	END-LIMIT CAPACITY	BASE DIAMETER	WEIGHT	REFERENCES
								WITHOUT SAFETY END-LIMIT
T8S 200	200 Nm	600 W	2.7 A	10 rpm	17 rounds	94 mm	11 Kg	**2008295**
T8S DMI 200	200 Nm	600 W	2.7 A	10 rpm	17 rounds	94 mm	12.5 Kg	**2008309**
T8S DMI 270	270 Nm	700 W	3.3 A	10 rpm	17 rounds	94 mm	12.5 Kg	**2009720**

Accessory references

* Accessories sold separately

DESCRIPTION	REFERENCES	
	x 1	x 10
BRACKET (ENTRAXLE 175 X 175 MM)	9018069 *	9018070 *
BRACKET FOR PLATE MOUNTING (ENTRAXLE 175 X 175 MM)	9018127 *	-
BRACKET TO BE SOLDERED (ENTRAXLE 80 X 100 MM)	9019839 *	-
COMPACT BRACKET TO SCREW (ENTRAXLE 80 X 100 MM)	9018370 *	-

DESCRIPTION	REFERENCES
	x 1
CHAIN MANUAL OVERRIDE KIT (WITHOUT CHAIN)	9019458 *
CHAIN LENGTH 10 METERS (ADJUSTABLE LENGTH)	9019460 *

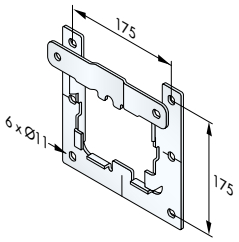

9018069 or 9018070 or 9018127

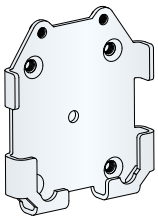

9019839 or 9018370

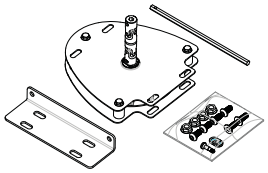

9019458



9019460

Recommended types of control

TYPE OF CONTROL	RADIO CONTROL	WIRED CONTROL WITHIN SIGHT, WITH MAINTAINED PUSH, WITHOUT SAFETY ACCESSORY
Operating mode	Automatic or sequential	Maintained push
Control boxes	 SD100 Hz box	not required
Control points	 Key switch and push buttons  Remote controls, radio transmitters and keypad	 Key switch or wired switch
Safety accessories	 Safety edge, photocell barrier & signalling light	not required

simu

Zone industrielle les Giranaux
70100 Arc-lès-Gray - France
T. +33 (0)3 84 64 75 00
@ service@simu.com

www.simu.com

Photo credit: SIMU – Realization SIMU - 01/24 - SIMU SAS, capital 5 000 000 euros, RCS Vesoul 425 650 090.
This document is not legally binding. We reserve ourselves the right to make any useful modification in order to constantly develop and improve our tender. SIMU shall not be held responsible for misuse by non-professionals.