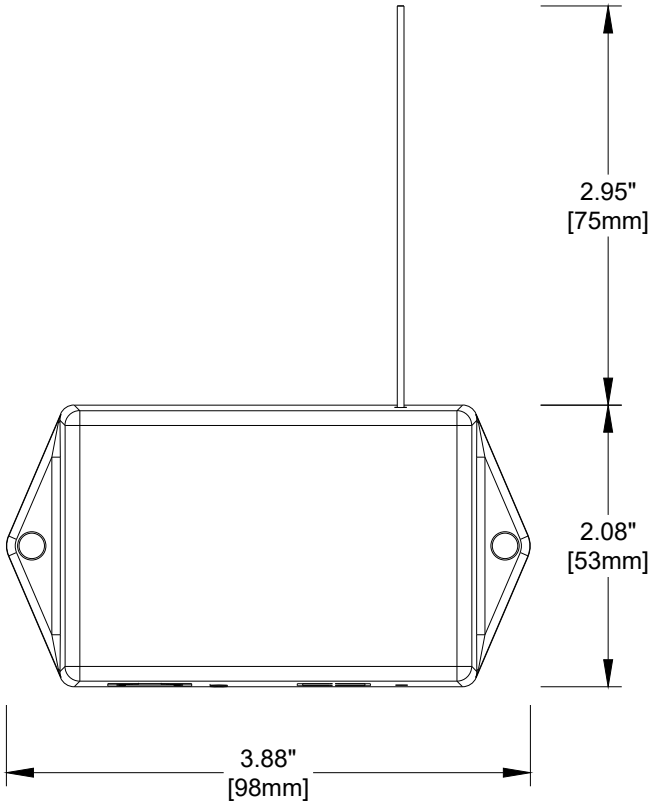

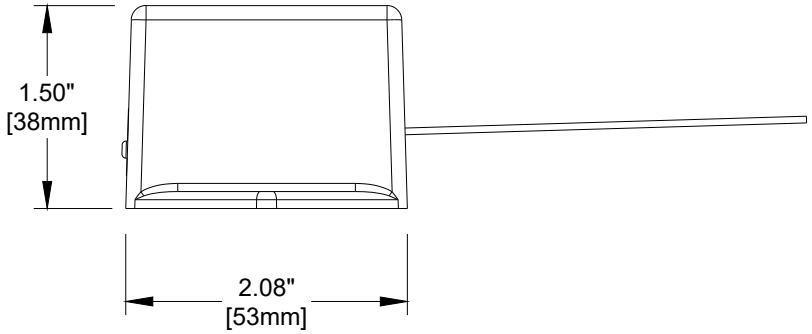

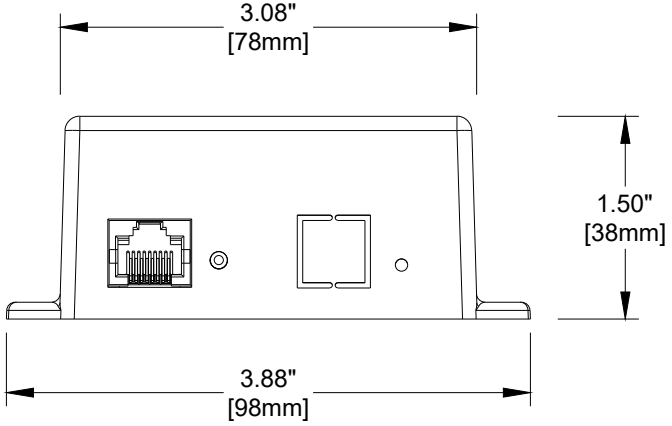

© 2024 Somfy Systems, Inc. All Rights Reserved. This drawing is the property of Somfy Systems, Inc.. The graphics, information and specific ideas in this document are the exclusive property of Somfy Systems, Inc. and must not be made public, copied, or sold. Others seeking permission to reproduce this document, in whole or in part, must obtain permission from Somfy Systems, Inc. in writing.

Tel: 1-800-64-SOMFY
Fax: 1-609-495-8165
www.somfysystems.com

somfy®

Date:	03/27/24
Print Size:	8.5" x 11"
Scale:	NTS
Sales:	N/A
Drawn by:	RV
Checked by:	N/A

Revisions

Rev	Date	By	Description
-	--/--/--	-	
-	--/--/--	-	
-	--/--/--	-	
-	--/--/--	-	
-	--/--/--	-	

Dwg Title: RTS to RS485 Receiver for animeo IP V2 Part# 1871498

Dwg No.: Part#1871498-SPEC

Project name: Technical Library

Client: Somfy Systems, Inc.

Address: 121 Herrod Boulevard
Dayton, NJ 08810