RTS Receiver for animeo® IP V2

Item #: 1871498

Overview:



The RTS Receiver for animeo® IP V2 allows for Somfy RTS interfaces to control groups, facades, or single motors in an animeo® IP system. Balance overall building efficiency and user needs with options that allow manual control via an RTS transmitter. The receiver works with Somfy's range of indoor RTS transmitters, pairing with up to five RTS channels. Any combination of Situo, DecoFlex, or Telis transmitters can be used with a single receiver.

Power and data is received by a single SDN connection. Commissioning the receiver is simplified using the animeo® IP keypad discovery wizard, which features auto-discovery with a single button press of the RTS transmitter.

Somfy Digital Network System Overview:

Somfy Digital Network™ (SDN) is Somfy's intelligent wired shading network. An SDN system is comprised of bus distribution devices that create a network for user interfaces, motorized applications, and integration devices. SDN is scalable and suitable for both small and large projects. The same components are used whether an SDN system remains standalone, is integrated into third-party automation systems, or is paired with Somfy's animeo® IP automated total solar management system.

Technical specifications:

- Input: 24V DC (SDN bus power)
- Max Power Consumption: 110mW
- Material: ABS
- Dimensions: 3.88 in. L x 2.08 in. W x 1.5 in. H (9.85cm L x 5.28cm W x 3.81cm H)
- Operating Temperature Range: Ambient temperature
- Frequency: 433.42 MHz
- Shipping Weight: 1 lb.

Features summary:

- Control motors individually, by group, facade, or an entire building
- Communication/power over single SDN connection
- Auto-addressing rather than auto-discoverable address
- Works with DecoFlex and Situo transmitters
- Can be controlled by up to 5 RTS channels

What's in the box:

- RTS Receiver for animeo® IP V2
- Instructions

Cable Pinouts:

SDN Cable Pinout (RJ45 connector)
ANSI/TIA/EIA 568-B Standard

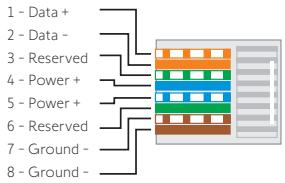

Optional accessories:

• Bus & Sensor Station Power Supply	1822440
• Situo® 1 RTS Pure II*	1870571
• DecoFlex WireFree™ Surface 5 Channel*	1871025

** Situo 1 & DecoFlex are examples. Choose any RTS transmitter or wireless wall switch.*

Connections and indicators:

Element		Function
1	**SDN Input**	RJ45 port for SDN input
2	**LED**	LED indicator
3	**Master Reset**	Factory reset
4	**RTS Antenna**	RTS antenna
5	**Mounting Flange**	Mounting flange

Side view

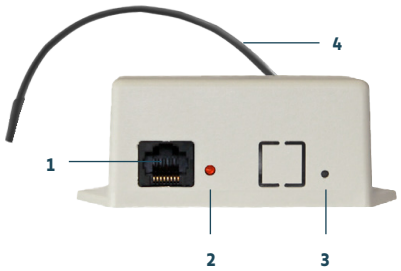

Front view

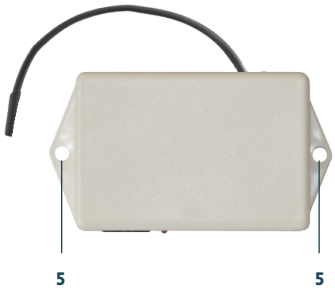

Dimensions:

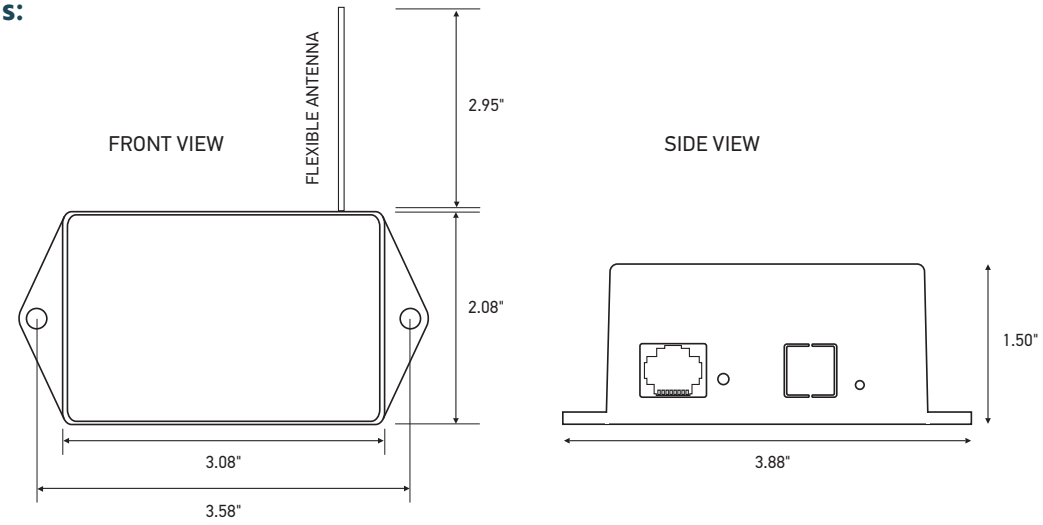

Best wiring practices:

The diagram below is meant for illustrative purposes to show the connections from product to product. This device could be used in other configurations than shown below. For specification information on individual products, see related product information. Follow all SDN wiring standards for distance limitations.

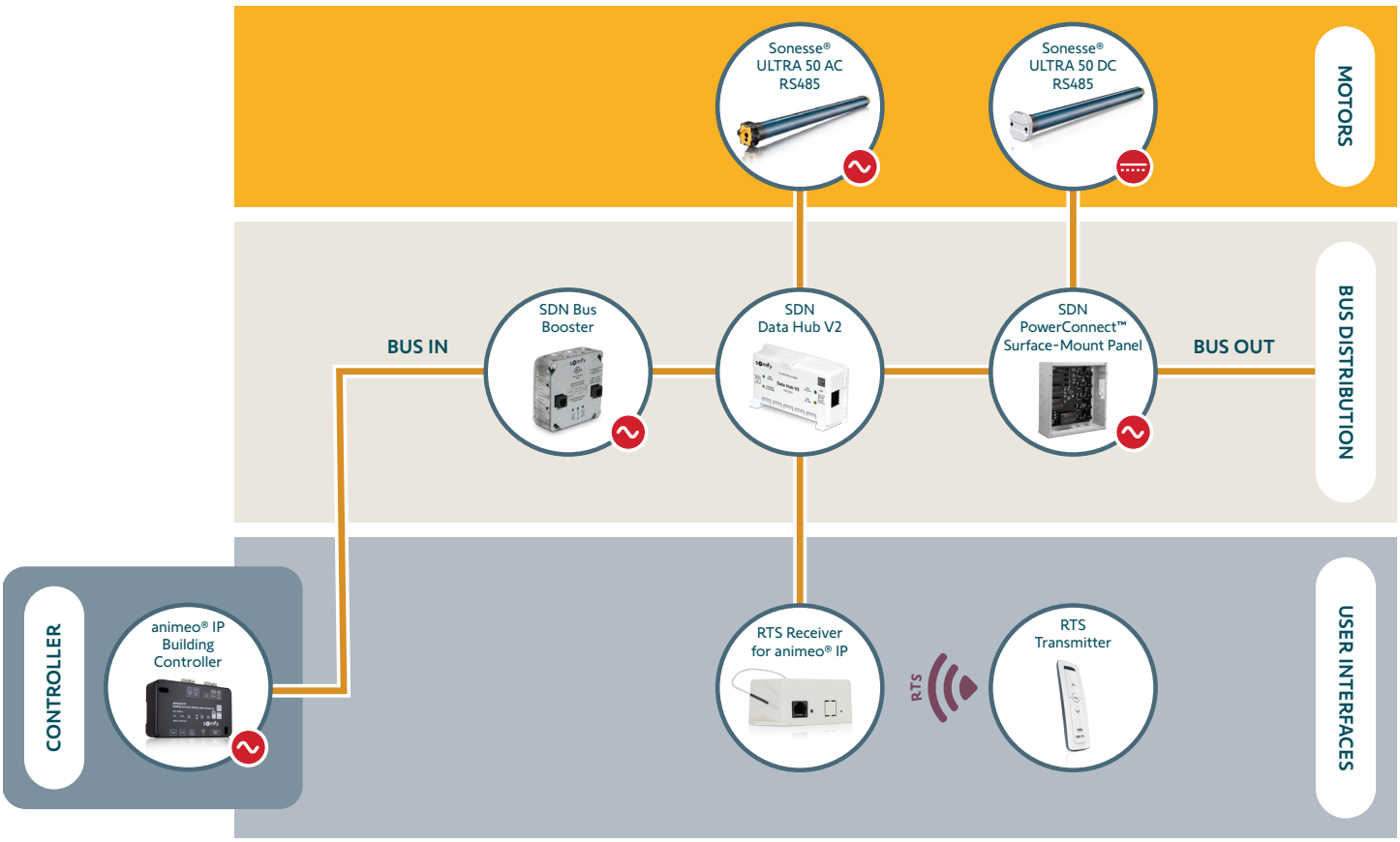

© Somfy Systems, Inc. • **APRIL 2024**