RTS
Radio Technology Somfy®



# LED RTS 24V DC Receiver Instructions

Item #1870872

4 x 1 Color Zones or RGB + 1 Color Zone

somfy®

**IMPORTANT:**

**BEFORE YOU BEGIN: Cut power before wiring or making any wiring changes**

## INSTALLATION

### Dimensions:

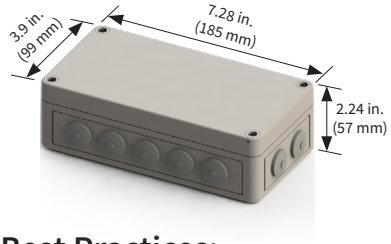


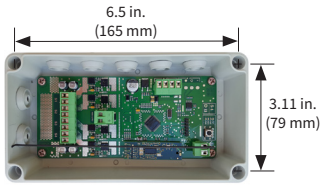


### Best Practices:

**1.** Determine which seals to route the wire and cut the nubs off the seals.

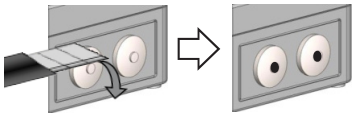

**2.** Route the wiring to bring cables into the box from below and use drip loops to prevent water intrusion. ***Do not insert more than one cable per seal.***

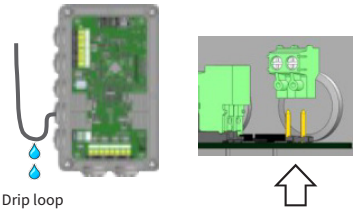


**3.** Remove the terminals to connect the wiring.

**4.** Strip wires 6mm (1/4") max and insert into the terminals as per the guide and tighten.

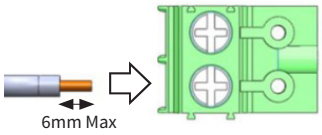


### Wiring Antenna:



**1:** Trim cable to length



**2:** Cut back outer jacket

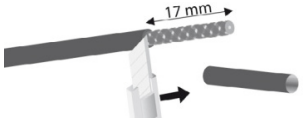


**3:** Pull back inner shielding and twist into a wire



**4:** Cut back inner jacket to expose 6mm (1/4") of center conductor




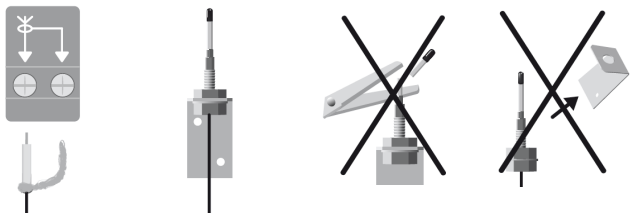

## WIRING CONNECTIONS

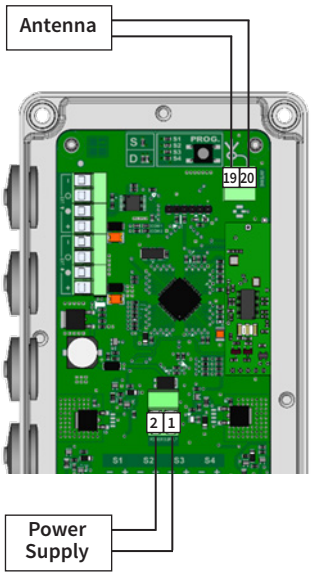


**OPTION 1:**

**4 SINGLE COLOR OUTPUTS**

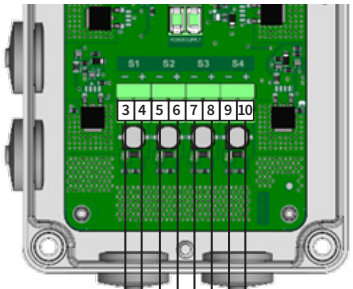


**OPTION 2:**

**1 RGB + 1 SINGLE COLOR**

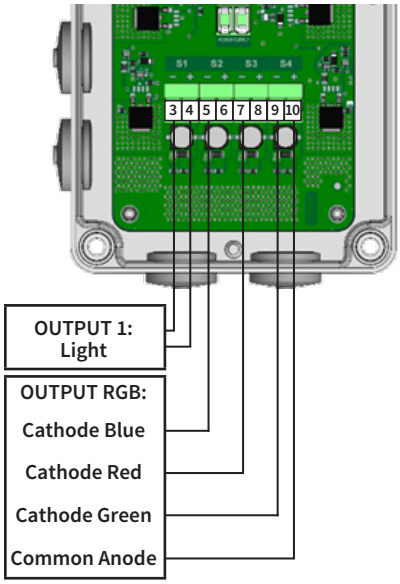


**WIRING CONNECTIONS**

| POWER SUPPLY | | |
|---|---|---|
| 1 | + | Input Power Supply: |
| 2 | - | 24V DC @ 0.5A + Amps required for all LEDs |

| OPTION 1 - 4 Single Color Outputs | | |
|---|---|---|
| OUTPUT 1 | | |
| 3 | + | PWM 24V DC - 4.2A Max |
| 4 | - | |
| OUTPUT 2 | | |
| 5 | + | PWM 24V DC - 4.2A Max |
| 6 | - | |
| OUTPUT 3 | | |
| 5 | + | PWM 24V DC - 4.2A Max |
| 6 | - | |
| OUTPUT 4 | | |
| 5 | + | PWM 24V DC - 4.2A Max |
| 6 | - | |

| OPTION 2 - RGB OUTPUT | | |
|---|---|---|
| 5 | - Blue | PWM - 4.2A Max |
| 7 | - Red | PWM - 4.2A Max |
| 9 | - Green | PWM - 4.2A Max |
| 10 | + Common | 24V DC - 12.6A Max |

| ANTENNA | | |
|---|---|---|
| 19 | SIGNAL | Core |
| 20 | GND | Braided Shield |

# PROGRAMMING

**Note:** During programming commands, connected LEDs will flash as confirmation.




## To Set the Mode (4 x 1 color OR RGB + 1 color):

1. Press the **PROG** button for more than 2 sec until S1 starts to blink.
2. Press the **UP** and **DOWN** buttons simultaneously on a transmitter.
3. The LEDs S1, S2, S3 and S4 will blink to show which mode you are in.
   - **a**. If the LEDs cycle through S1, S2, S3, S4 and back to S1, you are in 4X single color mode.
   - **b**. If the LEDs cycle between S1 lit and S2, S3, S4 lit together, you are in RBG + 1 single color mode.
4. Change the mode by pressing (**MY and UP**) OR (**MY and DOWN**) simultaneously.
5. Confirm the mode by pressing **MY** for more than 2 seconds.

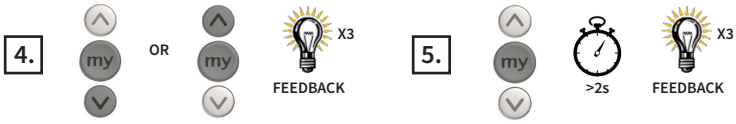


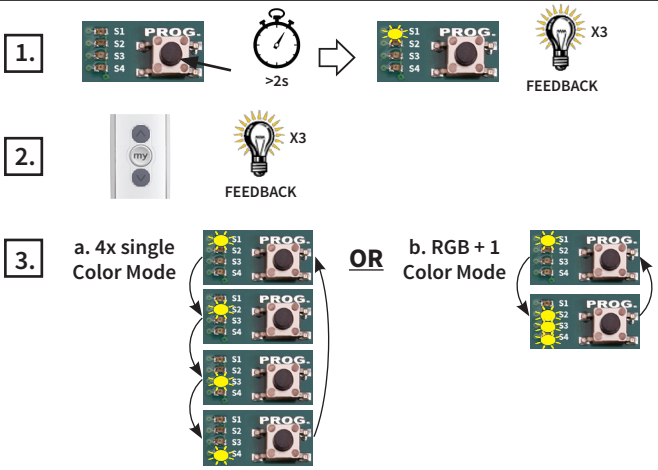


## To Add or Delete a Transmitter:

1. Press the **PROG** button for more than 2 seconds until S1 starts to blink.
2. Press the **PROG** button to select the LEDs you wish to add/delete a transmitter to.
   - **a**. 4 x 1 color mode select S1, S2, S3 or S4
   - **b**. RGB+1 mode, S1 for single color or S2+S3+S4 for RGB group
3. Select the channel on the transmitter you wish to add/delete.
4. Briefly press the **PROG** button on the back of the transmitter.

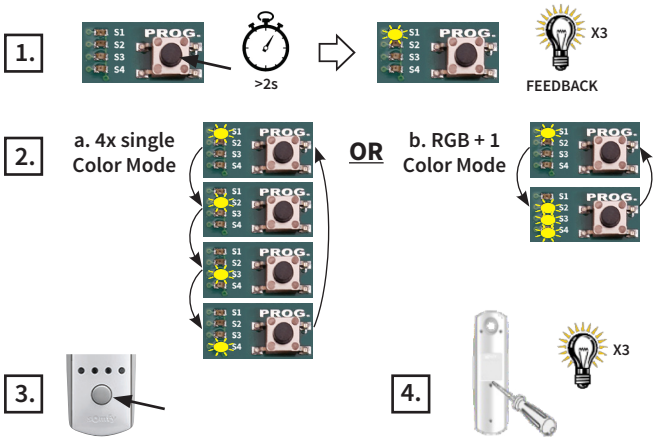


## Factory Reset:

Completely clear the memory
Press and hold the PROG button at least 7 seconds or until all LEDs are lit.




# OPERATION

## Single Color Outputs:

1. A short press on the **UP** button = **FULL ON**.
   Press and hold the **UP** button = **DIMMING UP**.
2. A short press on the **DOWN** button = **OFF**.
   Press and hold the **DOWN** button = **DIMMING DOWN**.
3. The scroll wheel allows dimming up and down.
4. Favorite **MY** position:
   - **a**. Dim the light to the desired **MY** level.
   - **b**. Press and hold the **MY** button 5 seconds until the lights blink.
   - **c**. Return automatically to the **MY** level by giving **MY** a short press.

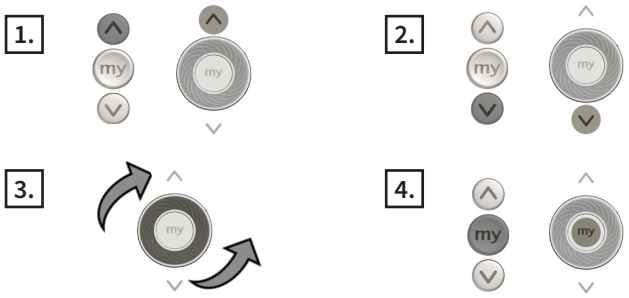


## Red Green Blue Output (RGB):

1. A short press on the **UP** button = **FULL ON**.
   Press and hold the **UP** button = **DIMMING UP**.
2. A short press on the **DOWN** button = **OFF**.
   Press and hold the **DOWN** button = **DIMMING DOWN**.
3. The scroll wheel or **MY+UP** or **MY+DOWN** cycles through the colors.
4. Favorite **MY** position:
   - **a.** Dim the light to the desired **MY** level
   - **b.** Press and hold the **MY** button 5 seconds until the lights blink.
   - **c.** Return automatically to the **MY** level by giving **MY** a short press.

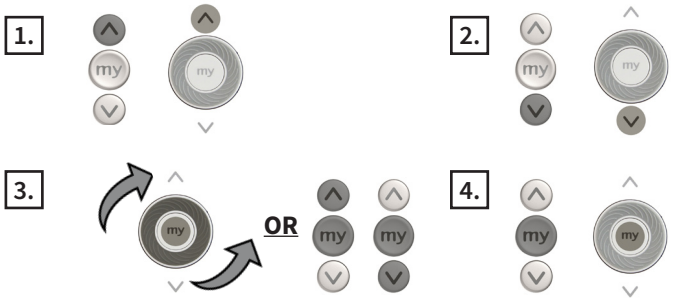

## Red Green Blue Output (RGB) *Continued*:

### Optional RGB Automatic Modes

The RTS 24V LED Receiver has 4 optional automatic modes. You can cycle between the manual mode and the 4 automatic modes by pressing UP and DOWN simultaneously.

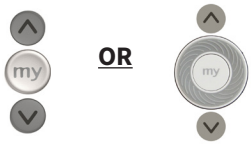


### RGB Auto Mode 1: Brightness automatically varies. Color and speed of variation set manually.

1. Pressing **UP** increases the speed the brightness changes.
   A short press for 1 step or hold to continue increasing.
2. Pressing **DOWN** decreases the speed the brightness changes.
   A short press for 1 step or hold to continue decreasing.
3. The scroll wheel or **MY+UP** or **MY+DOWN** cycles through the colors.
4. Favorite **MY** position:
   **a**. Set the light to the desired color and speed of variation.
   **b**. Press and hold the **MY** button 5 seconds until the lights blink.
   **c**. Return automatically to the **MY** setting by giving **MY** a short press.

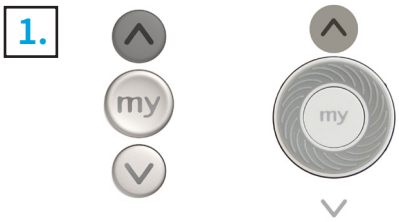


### RGB Auto Mode 2: Flashing automatically. Color and speed of flash set manually.

1. Pressing **UP** increases the speed of the flashing.
   A short press for 1 step or hold to continue increasing.
2. Pressing **DOWN** decreases the speed of the flashing.
   A short press for 1 step or hold to continue decreasing.
3. The scroll wheel or **MY+UP** or **MY+DOWN** cycles through the colors.
4. Favorite **MY** position:
   **a**. Set the light to the desired color and speed of flashing.
   **b**. Press and hold the **MY** button 5 seconds until the lights blink.
   **c**. Return automatically to the **MY** setting by giving **MY** a short press.




### RGB Auto Mode 3: Color automatically varies. Brightness and speed of variation set manually.

1. Pressing **UP** increases the brightness.
   A short press for 1 step or hold to continue increasing.
2. Pressing **DOWN** decreases the speed of the color change.
   A short press for 1 step or hold to continue decreasing.
3. The scroll wheel or **MY+UP** or **MY+DOWN** increases or decreases the speed of the color change.
4. Favorite **MY** position:
   **a**. Set the light to the desired brightness and speed of color change.
   **b**. Press and hold the **MY** button 5 seconds until the lights blink.
   **c**. Return automatically to the **MY** setting by giving **MY** a short press.

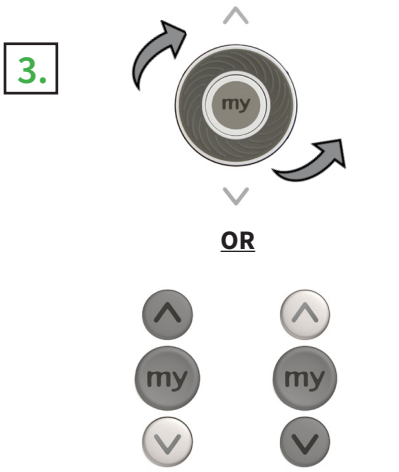


### RGB Auto Mode 4: Flashing automatically with color change. Brightness and speed of flash set manually.

1. Pressing **UP** increases the brightness.
   A short press for 1 step or hold to continue increasing.
2. Pressing **DOWN** decreases the speed of the color change.
   A short press for 1 step or hold to continue decreasing.
3. The scroll wheel or **MY+UP** or **MY+DOWN** increases or decreases the speed of the flash and color change.
4. Favorite **MY** position:
   **a**. Set the light to the desired brightness and speed of flash and color change.
   **b**. Press and hold the **MY** button 5 seconds until the lights blink.
   **c**. Return automatically to the **MY** setting by giving **MY** a short press.




## Diagnostic LED's:

| STATUS | |
|---|---|
| S | **1 Flash every 4 seconds:**<br>- Stand By |
| | **2 Flashes every 4 seconds:**<br>- Command running |

| FAULT | |
|---|---|
| D | **RED: Solid for 5+ seconds:**<br>- Current consumption output exceeded or excessive temperature on the electronic board during the operation |
| | **ORANGE: Locked for several seconds:**<br>- Memory updating |



© Copyright 7/2020 SOMFY SYSTEMS, LLC.