TELECO
A BRAND OF SOMFY GROUP

100 - 277V AC RADIO RECEIVER CONTROLLING 1-COLOR LED COMMON ANODE WITH SYNCHRONIZED OUTPUTS, 150W INTEGRATED POWER SUPPLY

Product code

2320001 *(150W - 433 MHz* **RTS***)*

*The product guarantees **IP 65** rating if properly assembled.*

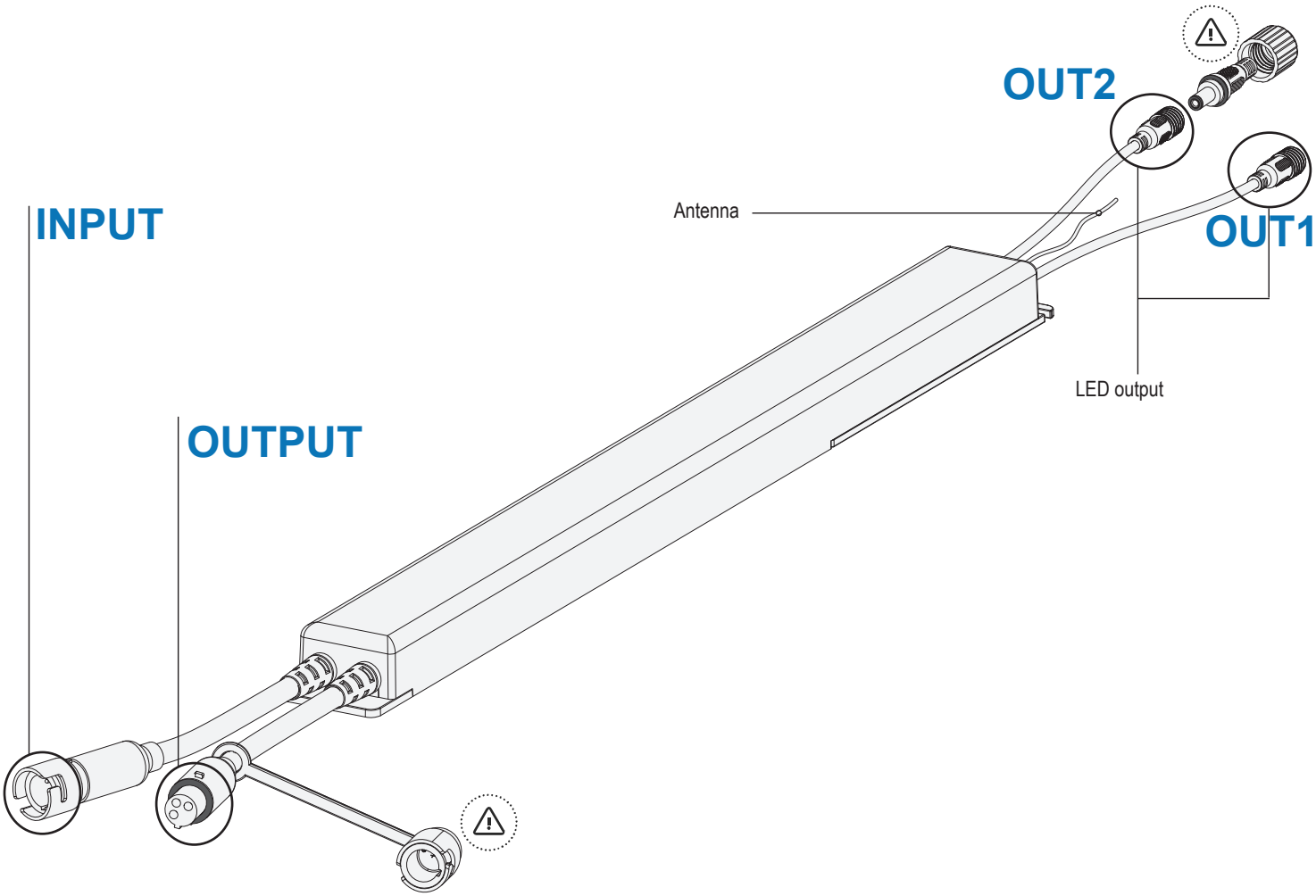

ATTENTION: Apply the provided weather cap if output is not used.

WARNINGS

BEFORE INSTALLING AND USING THE RECEIVER, READ THESE INSTRUCTIONS CAREFULLY.

SCOPE OF APPLICATION: The LED receivers 2320001 150W are equipped with RTS radio technology. It allows for the control as a group of one or two white LED light sources connected to the constant voltage output(s) (24 V). These receivers enable you to vary the light intensity of the LED lights and to program a preferred light intensity, known as the “my” preferred position. Due to their small size, they can be discreetly installed near the product they control, connecting them to the mains power supply using plug and play cables. With an IP 65 protection rating, these receivers are suitable for protected outdoor use and are ideal for controlling the lighting of an awning, pergola, or veranda.

RESPONSIBILITY: The product must be installed by a professional, in accordance with these instructions and applicable regulations in the country of installation. The receiver must not be used outside the above-described scope of application. Any misuse of the product or failure to comply with the instructions in this manual will void the warranty, which also disclaims any liability for damages and/or injuries. The installer must inform customers about the conditions of use and maintenance of the receiver and must provide them with the user and maintenance instructions after installation. Any after-sales service on the receiver requires the intervention of a professional. Before any installation, check the compatibility of this product with the associated equipment and accessories.

INSTALLATION: All connections must be rated for a single-phase general power supply of 100-120V AC. Provide all necessary safety devices and use suitable connection materials according to current electrical safety standards. The connection cables must have a section adequate for the applied load. Before connecting the power supply to the mains, ensure the LEDs are correctly connected to the receiver. Ensure that the power of the LED lights connected to the receiver does not exceed 4 A per output. Incorrect connection of LED diodes (reversal of polarity) could damage them; therefore, be very careful when connecting them, respecting the polarities. For all product connections, use only original certified cables. Cables passing through a metal wall must be protected and insulated by a sleeve or sheath. Secure the cables to avoid any contact with moving parts. The receiver cable cannot be disassembled. If the cable or the external flexible wire of this lighting device is damaged, it must be replaced only by the manufacturer, their service technician, or a similarly qualified person to prevent hazards. To ensure good radio reception, make sure the external antenna does not touch any metal parts. Do not cut the antenna wire. The product must not be embedded in or placed on insulating materials such as fiberglass, polystyrene, or similar products. Keep the container as ventilated as possible. PRODUCT DISPOSAL: At the end of its useful life, the device must not be disposed of as household waste but taken to a collection center for electrical and electronic waste. In the view of a constant development of their products, the manufacturer reserves the right for changing technical data and features without prior notice.

DIMENSIONS

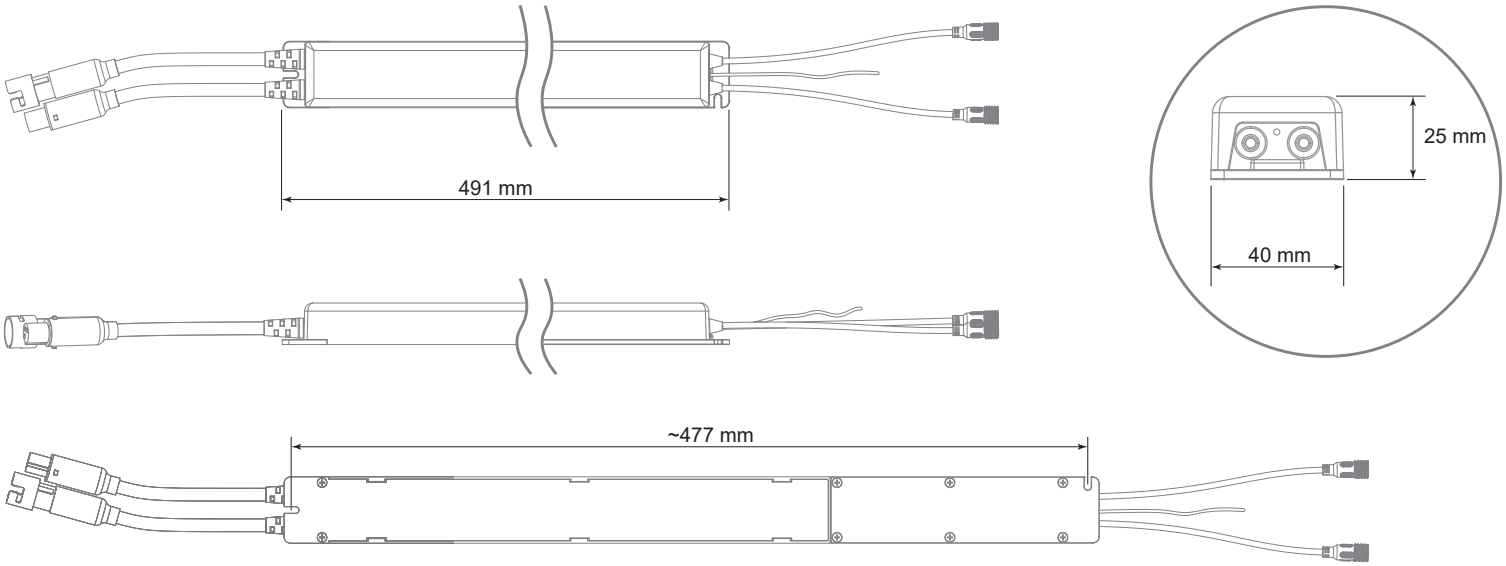

CONNECTIONS

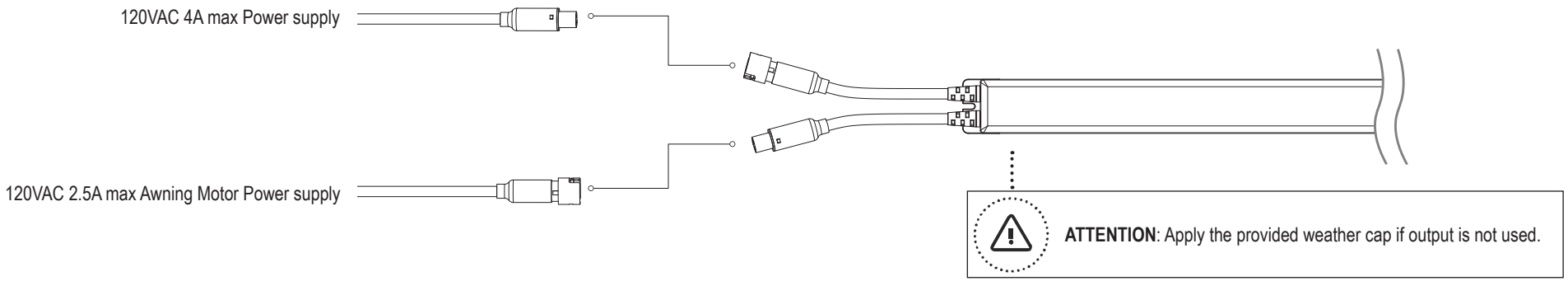

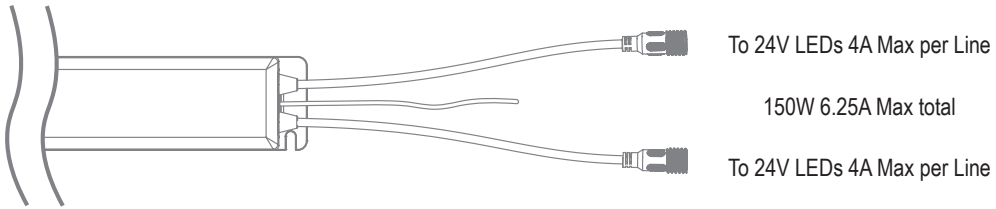

1.0 MEMORY STATUS

ON	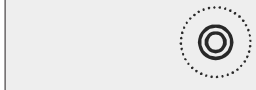	On each programming step the LED Control will give a blink of the connected LEDs as feed back to confirm the command was accepted. If the LEDs are off, the feedback is a blink on and then back off. If the LEDs are on, the feedback will be a blink off and then back on. Some programming functions give a slow blink 2 to 3 seconds ON/OFF (or off/on as mentioned above) and others will provide a fast blink as feedback.
		When power is first applied to the LED Control, the LEDs will give a slow blink. This is the indication that the LED Receiver is not programmed.

2.0 USER COMMANDS

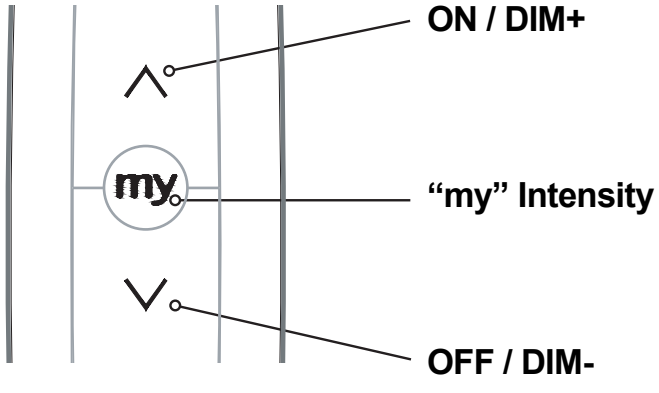



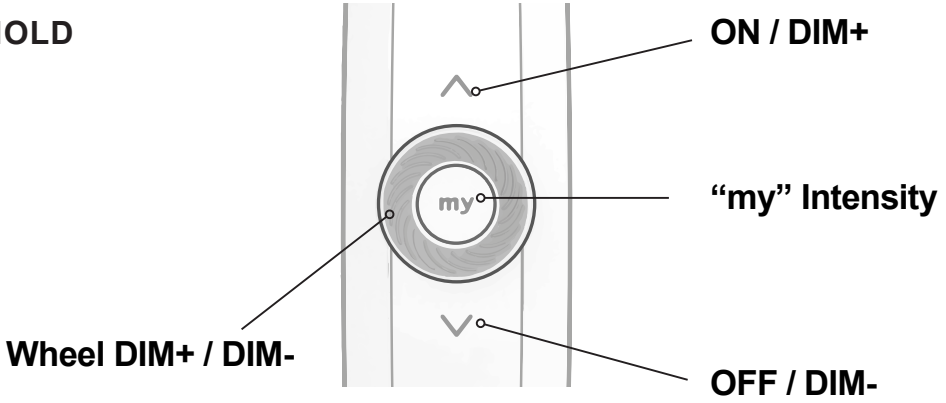

2.1 MEMORIZATION OF THE FIRST TRANSMITTER

ATTENTION: *the procedure is possible only if the* ***memory is empty****. If multiple receivers are present, power one at a time.*

1. Power up the LED Control and verify that the LEDs give a slow blink.
2. Press and the UP and DOWN buttons simultaneously. The LEDs will give slow blink.
3. Press the programming button until the LEDs give a slow blink. The transmitter in now programmed.

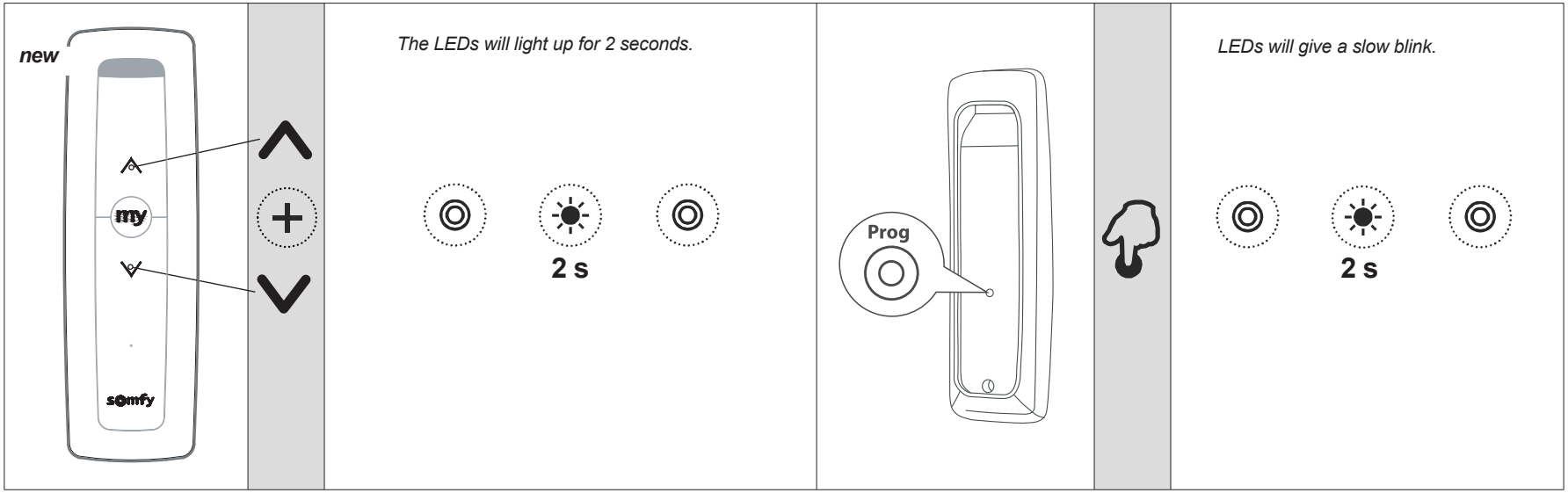

2.2 MEMORIZATION OF ADDITIONAL TRANSMITTER CHANNELS

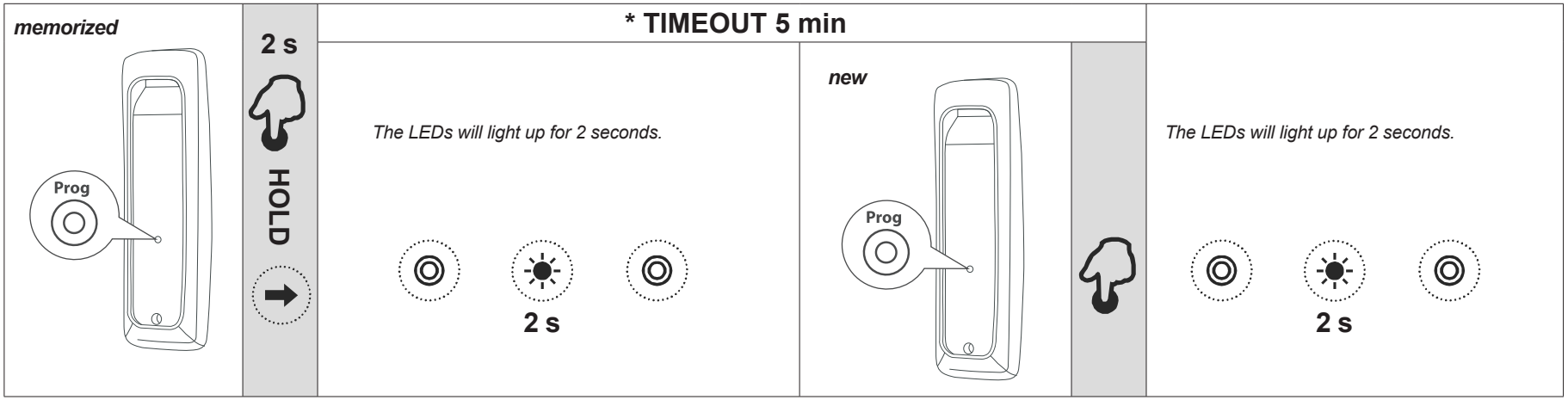

A total of 12 RTS transmitters (channels) can be memorized by the LED Receiver

1. With the LEDs OFF, use a programmed transmitter and press and hold the PROGRAMMING button until the LEDs give a slow blink
2. Press the PROGRAMMING button of the transmitter you wish to add, the LEDs will give a slow blink. The transmitter is ready for your use.

2.3 DELETION OF A TRANSMITTER CHANNEL

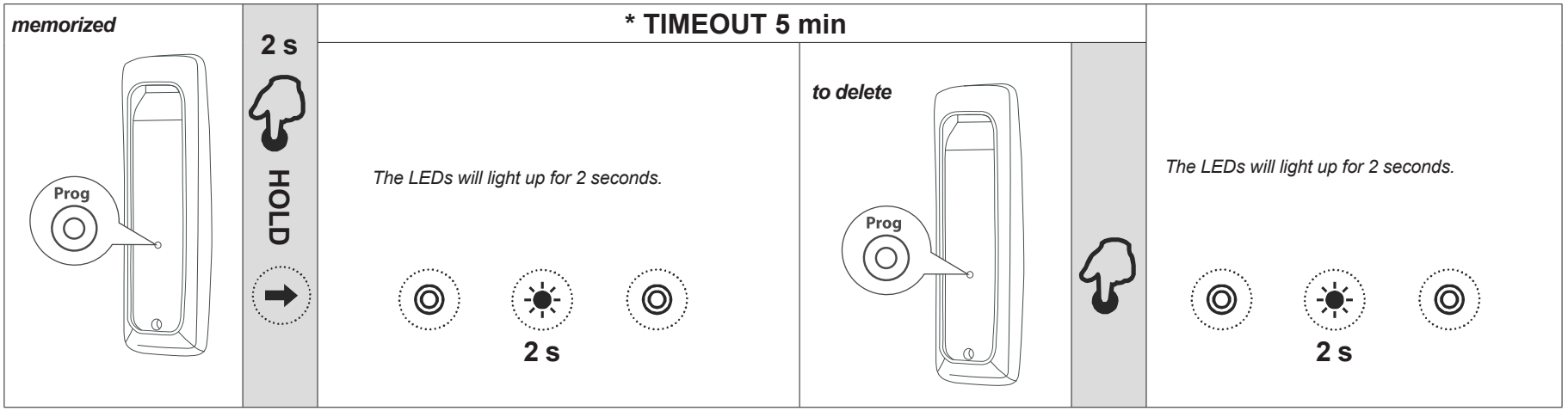

*The procedure can be canceled by pressing one of the keys (**my**, ∧, ∨).*

1. With the LEDs off, use a programmed transmitter and press and hold the PROGRAMMING button until the LEDs give a slow blink.
2. Press the PROGRAMMING button of the transmitter you wish to delete. The LEDs will give a slow blink. The transmitter channel is deleted.

2.4 DELETION OF ALL TRANSMITTERS/CHANNELS

If all programmed transmitters are lost or broken, the LED control can be reset to factory setting to allow a new transmitter to be added.

1. If a motor is connected to the LED control, disconnect the motor before starting. Reconect the motor after the LED control has been reprogrammed.
2. Cut power for 10 seconds.
3. Restore power for 10 seconds.
4. Cut power for 10 seconds.
5. Restore power. The LED control should start a slow ON/OFF blink cycle that will continue for 2 minutes if no other commands are given.
6. While the LEDs are in the ON/OFF blink cycle, press and hold the programming button on the transmitter until the LEDs give a fast blink ON/OFF and then a second blink ON/OFF and then remain off.

The control is now reset and can be programmed with a new transmitter as per section 2.1.

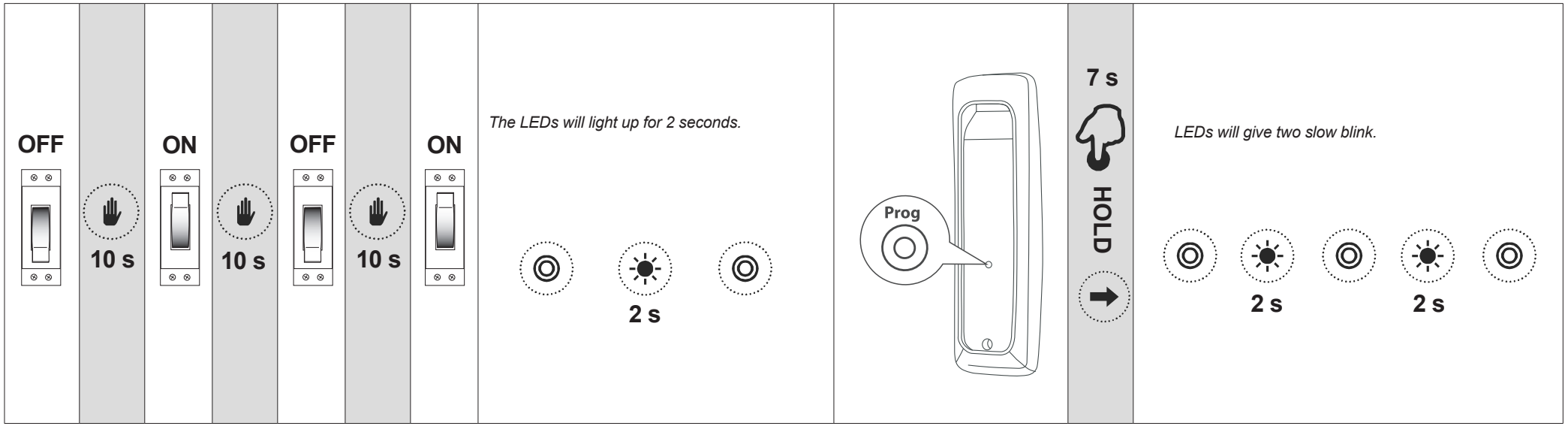

The procedure is possible using any transmitter (memorized or new).

2.5 ENERGY SAVING MODE

The LED Control has a 3 hour Timer that can be enabled or disabled as desired. The timer is disabled in the factory default mode. With the Timer enabled, the control will automatically turn off the LEDs 3 hours after the last command is given.

default value = deactivated

Enable the Timer

Simultaneously press and hold for approximately 7 seconds the UP, MY, and DOWN buttons until the LEDs give a fast blink.

Disable the Timer

Simultaneously press and hold for approximately 7 seconds the UP, MY, and DOWN buttons until the LEDs give a fast blink.

Each time the UP, MY and DOWN buttons are held for 7 seconds will toggle the Timer on or off.

One blink = 3 hour Timer Enabled

Two blinks = 3 hour Timer Disabled

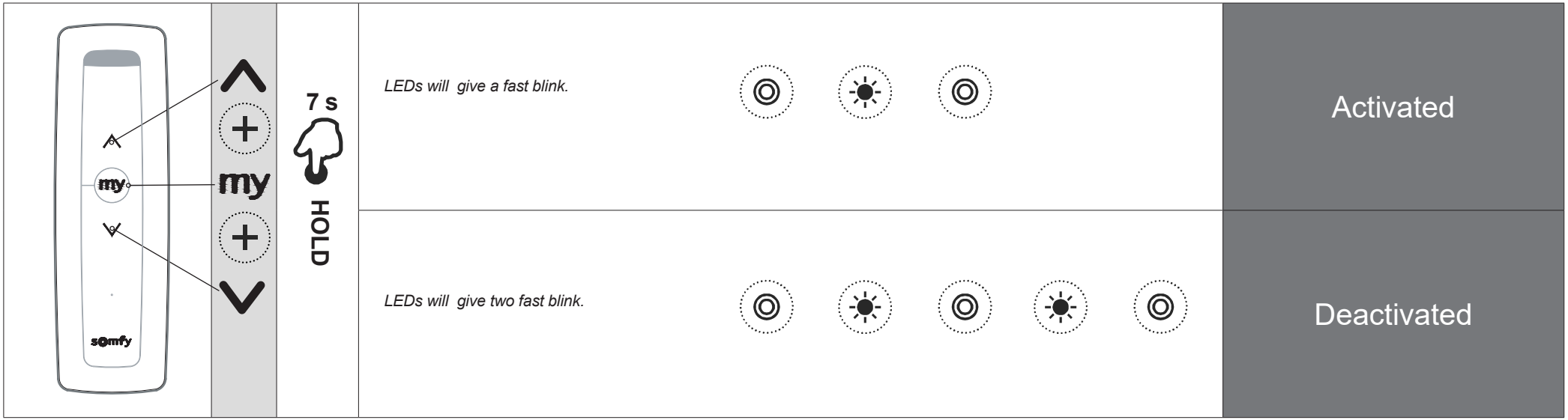

2.6 “MY” SETTING

my *default value = 50%*

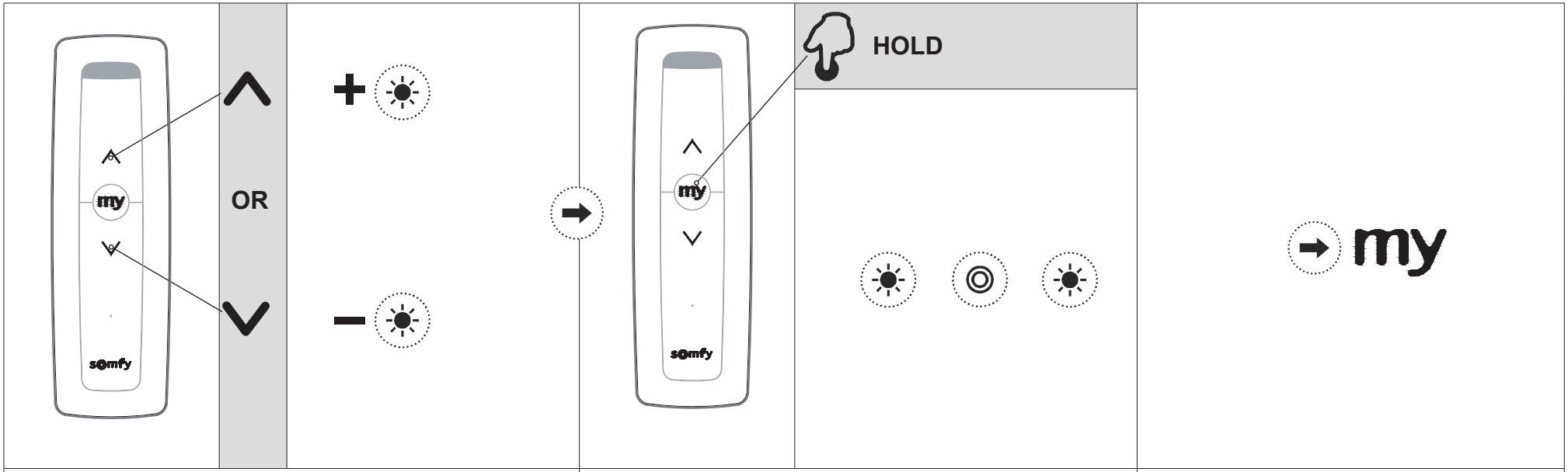

Hold down until the desired intensity is reached.	*Hold down until the LED lights blink off and back on.*	*The current inensity will be saved as “MY”.*

PRODUCT TECHNICAL SPECIFICATIONS

Power supply	**100-277 VAC 50-60 Hz 4A Max**
Output	**1 (24V DC +/-5%)**
Maximum power outputs (OUT1 + OUT2)	**150W**
Maximum power for single output (OUT1,OUT2)	**100W**
Inrush current (Ipk)	**80A/400uS**
Operating temperature range	**-20°C +45°C**
Reception frequency	**433 MHz**
Radio memory capatibility (transmitters)	**62**
Protection rating	**IP 65**
Timer function if enabled	**3 h**
Dimension	**491 x 40 x 25**
The connection cables must have a section suitable to the maximum applied load.	
The product is designed for exclusive use with constant voltage LED loads	
Electrical isolation 24V DC	**Class II**
Through ground connection only for motor connector.	



INTEGRATED POWER SUPPLY TECHNICAL SPECIFICATIONS

Integrated power supply	
Max power output	**150W**
Protection: short circuit, overload and overheating	
Mounting location in case of indoor installations	

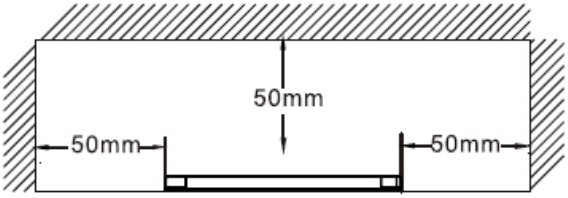

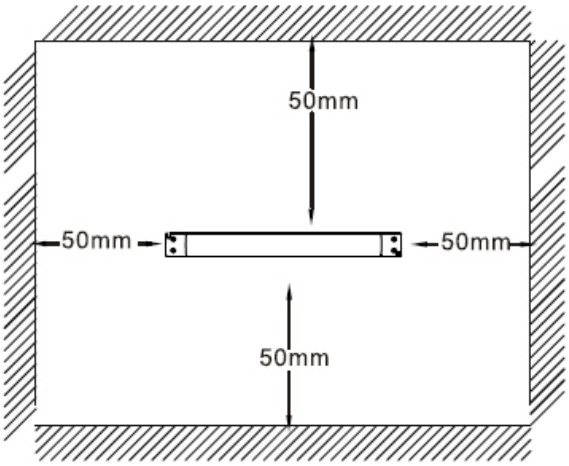

The product is exclusively designed for LED loads

TELECO / A BRAND OF SOMFY GROUP

Somfy Systems, Inc.
T: (800) 22-SOMFY
www.somfypro.com

New Jersey
121 Herrod Blvd.
Dayton, NJ 08810
T: (609) 395-1300
F: (609) 395-1776

Florida
1200 SW 35th Ave.
Boynton Beach, FL 33426
T: (561) 995-0335
F: (561) 995-7502

California
15301 Barranca Pkwy.
Irvine, CA 92618-2201
T: (949) 727-3510
F: (949) 727-3775

Somfy ULC
T: (800) 66-SOMFY
www.somfypro.ca

Canada
6411 Edwards Blvd.
Mississauga, ON L5T 2P7
T: (905) 564-6446
F: (905) 238-1491

© Somfy Systems, Inc. • **JANUARY 2025**
All brands, products, and trademarks are the property of their respective owners.
This document is the property of Teleco Automation Srl, which reserves all reproduction and copyrights