2320001 RTS 24V Dimming LED Control White

(150W - 433 MHz **RTS***)*

100 - 277V AC RADIO RECEIVER CONTROLLING 1-COLOR LED COMMON ANODE WITH SYNCHRONIZED OUTPUTS, 150W INTEGRATED POWER SUPPLY

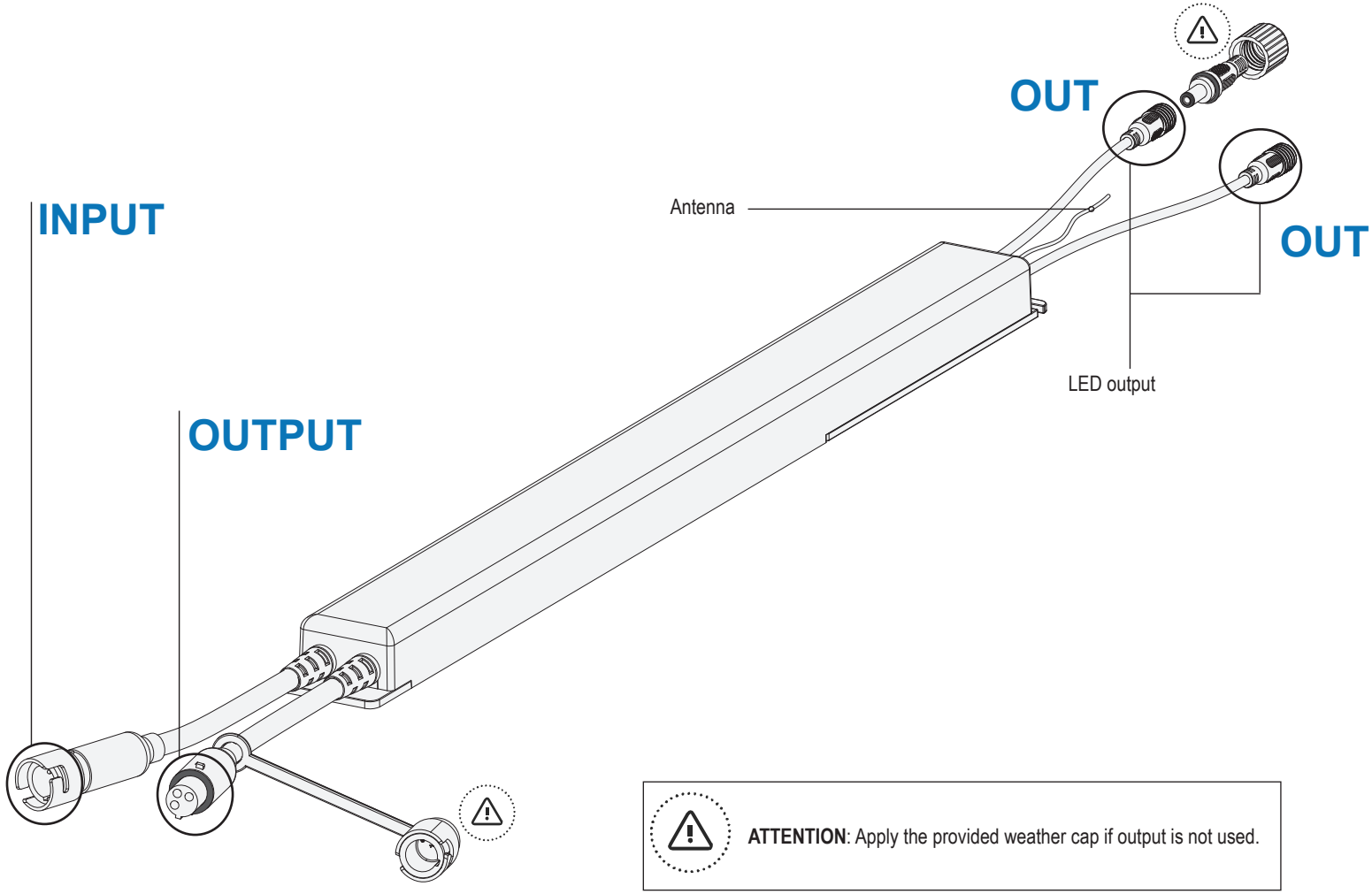

ATTENTION: Apply the provided weather cap if output is not used.

DIMENSIONS

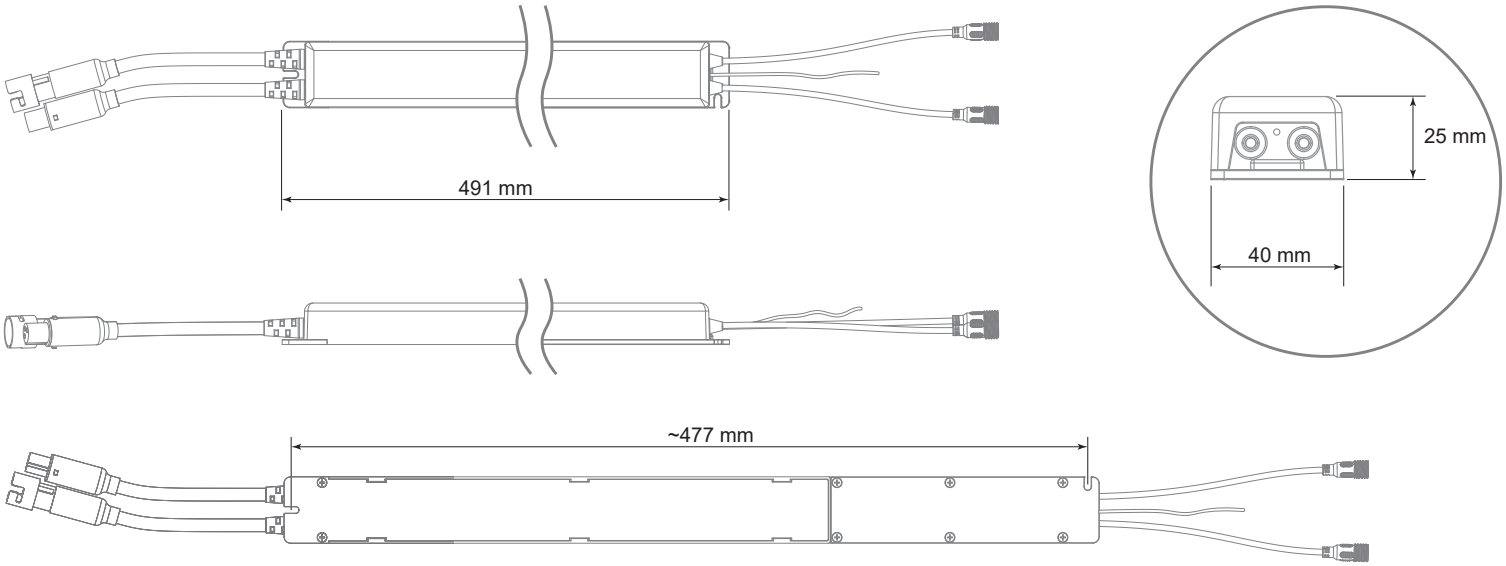

CONNECTIONS

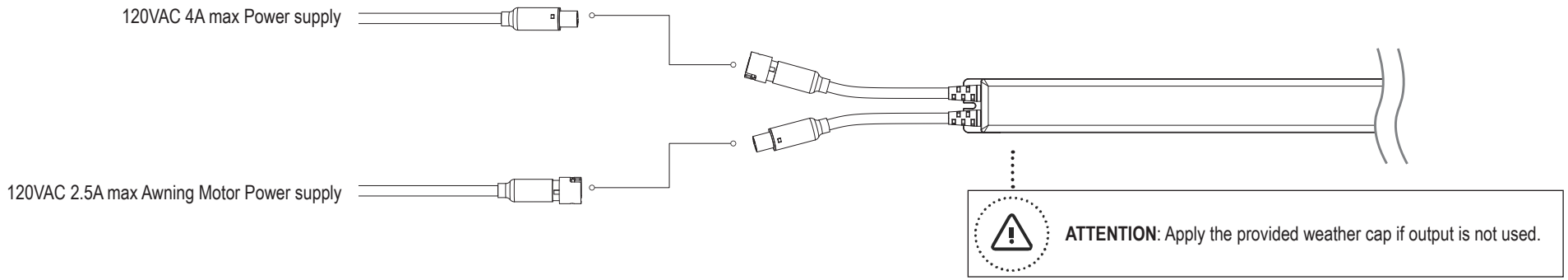

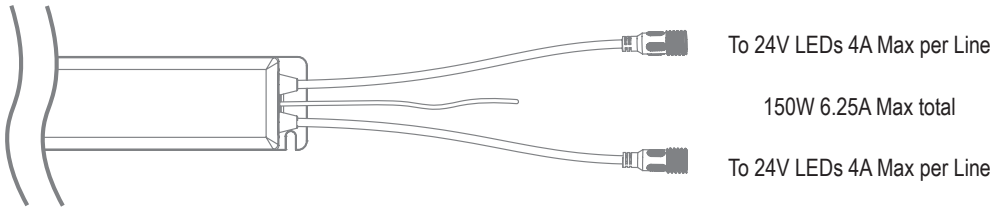

TECHNICAL SPECIFICATIONS

Power Supply	**100-277 VAC 50-60 Hz 4A Max**
Output	**1 (24V DC +/-5%)**
Max power output	**150W**
Operating temperature range	**-20°C +45°C**
Line Power Cables	**SJTW AWG18**
Reception Frequency	**433 MHz**
UL Approval/File Number	***PENDING***
Radio memory capability (transmitters)	**62**
Protection rating	**IP 65**
Protection: short circuit, overload and overheating	
Mounting location in case of indoor installations	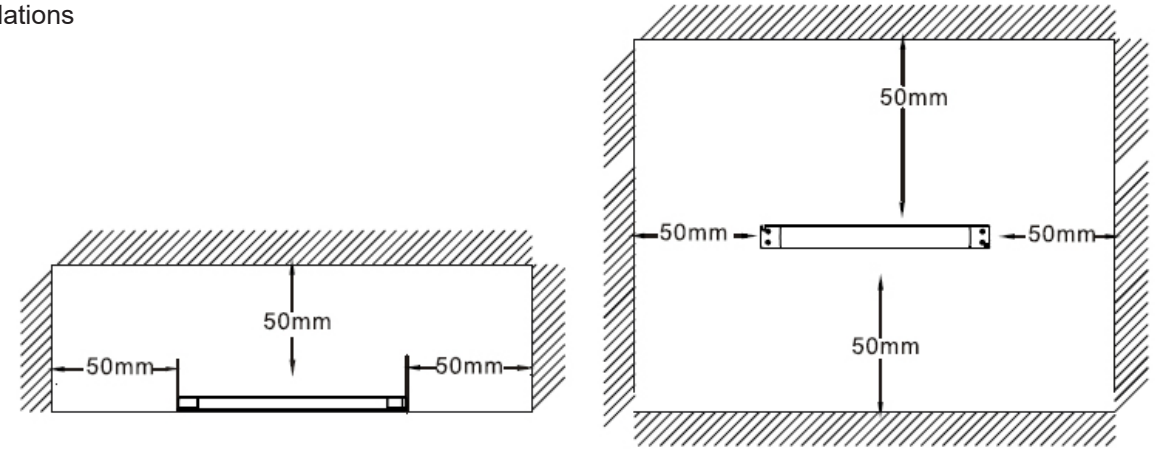
The product is exclusively designed for LED loads	

ACCESSORIES

NOTES:

- Type of cable: 2 x 0.35mm² clear
- Double insulation
- IP 65
- Barrel connector 5.5mm OD, 2.5mm ID

		Meters	
Ref #	**Code**	**X**	**Y**
2320029	SPT066	1.5	N/A
9028731	SPT050006	3	N/A
9028729	SPT074	5	N/A
2320028	SPT050001	7	N/A
9028733	SPT0500023	0.02	0.02
2320027	SPT078	0.16	0.02

2320029 SPT066
9028731 SPT050006
9028729 SPT074
2320028 SPT050001

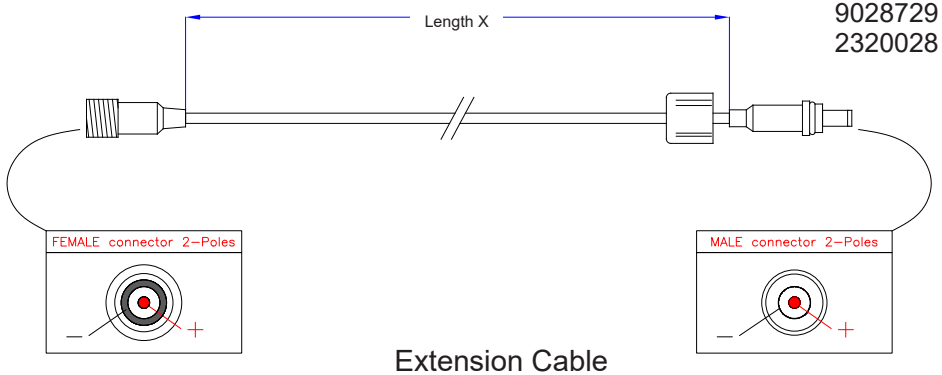

Extension Cable

9028733 SPT0500023
2320027 SPT078

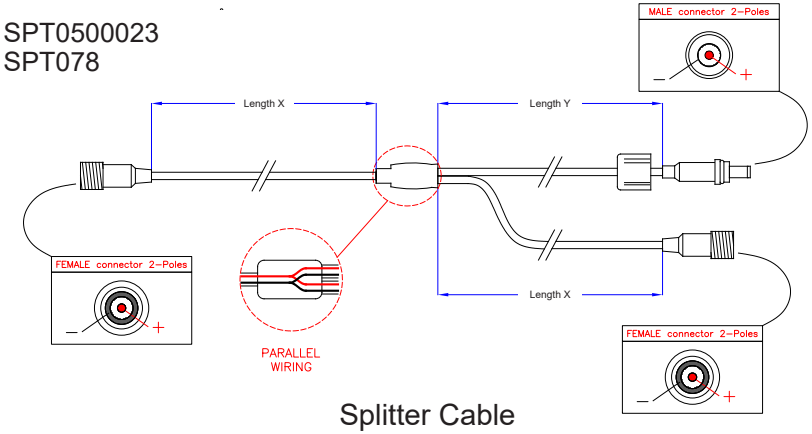

Splitter Cable

2320023 Adaptor 5.5mm Barrel to JST

NOTES:

- Type of cable: 2 x 0.35mm² transparent
- Wire with white line is positive

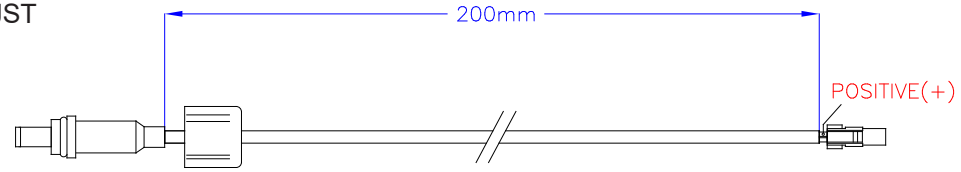

Adaptor Cable

© Somfy Systems, Inc. • SEPTEMBER 2024
All brands, products, and trademarks are the property of their respective owners.