Somfy Connect Universal Automation Interface (UAI) Plus

Item #: 1870272

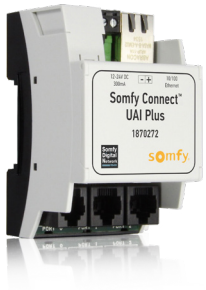

Overview:

The Somfy Connect Universal Automation Interface (UAI) Plus allows for commissioning and integrating Somfy Digital Network™ (SDN) over IP/Ethernet. Embedded motor commissioning software streamlines SDN system configuration. The Somfy UAI Plus is compatible with the Somfy Synergy™ API as well as drivers from popular home automation systems, making it easy to integrate custom automation programming.

Somfy Digital Network System Overview:

Somfy Digital Network™ (SDN) is Somfy's intelligent wired shading network. An SDN system is comprised of bus distribution devices that create a network for user interfaces, motorized applications, and integration devices. SDN is scalable and suitable for both small and large projects. The same components are used whether an SDN system remains standalone, is integrated into third-party automation systems, or is paired with Somfy's animeo® IP automated total solar management system.

Features summary:

- Embedded commissioning software
- Simplified SDN programming
- Powered by the SDN bus line
- Single integration point for third-party automation systems over IP or RS232
- Compatible with SDN 2.0
- Works with Somfy Synergy™ API
- Controls up to 250 motors
- Powered from the SDN bus line
- SDDP Integration

What's in the box:

- Somfy UAI Plus
- 8" Din Rail
- 7' Ethernet Cable
- Quick Start Guide

Compliance specifications:

- UL Listed
- CE Approved

Technical specifications:

- Input: 12-24V DC
- Power Consumption: 60mA
- SDN Power Units: Consumes 6 Power Units
- Material: ABS
- Operating Temperature Range: Ambient
- temperature
- Dimensions: 3.53" L x 2.375" W x 2.125" H
- Maximum Wiring Distance (Ethernet): 328' from the router using standard Cat-5e cable
- Maximum Wiring Distance (SDN): 4,000' total wire length
- Shipping Weight: 1 lb.
- Indoor use only

Optional accessories:

- DB9 to RJ45 adaptor for RS485 (9015029)

Supported protocols:

- TCP, UDP, TELNET Client, WEB Server, HTTP, UPNP, SDDP, Somfy Digital Network™ (SDN) and The Somfy Synergy™ API

Cable Pinouts:

Port 0
Not used

Port 1
RS232 input or RS485 input

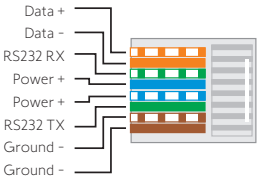

Port 2
SDN input

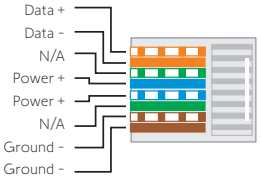

Connections and indicators:

Element		Function
1	**External Power input**	12-24V DC power supply
2	**Ethernet Port**	Ethernet input
3	**Port 0**	N/A
4	**Port 1**	RS-232 Input/SDN Bus Power input
5	**Port 2**	SDN connection

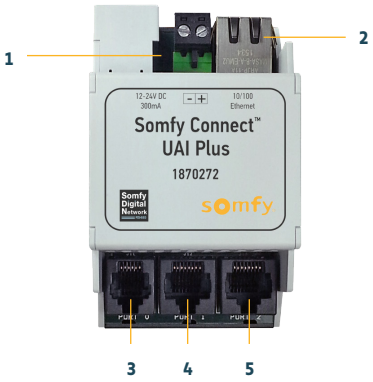

Dimensions:

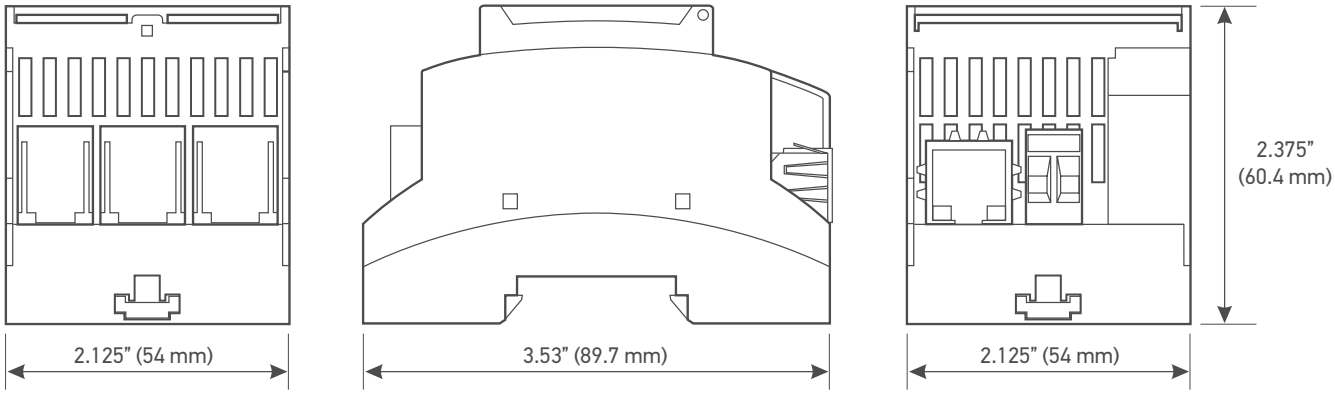

Best wiring practices:

The diagram shown below is meant for illustrative purposes to show the connections from product to product. This device could be used in other configurations than shown below. For specification information on individual products see related product information. Follow all SDN wiring standards for distance limitations.

When connecting over RS232, a DB9 to RJ45 (9015029) adaptor is required (see optional accessories). The Somfy UAI Plus joins an SDN network using RS485 to any device port on the SDN bus. This connection provides power and data to the UAI.

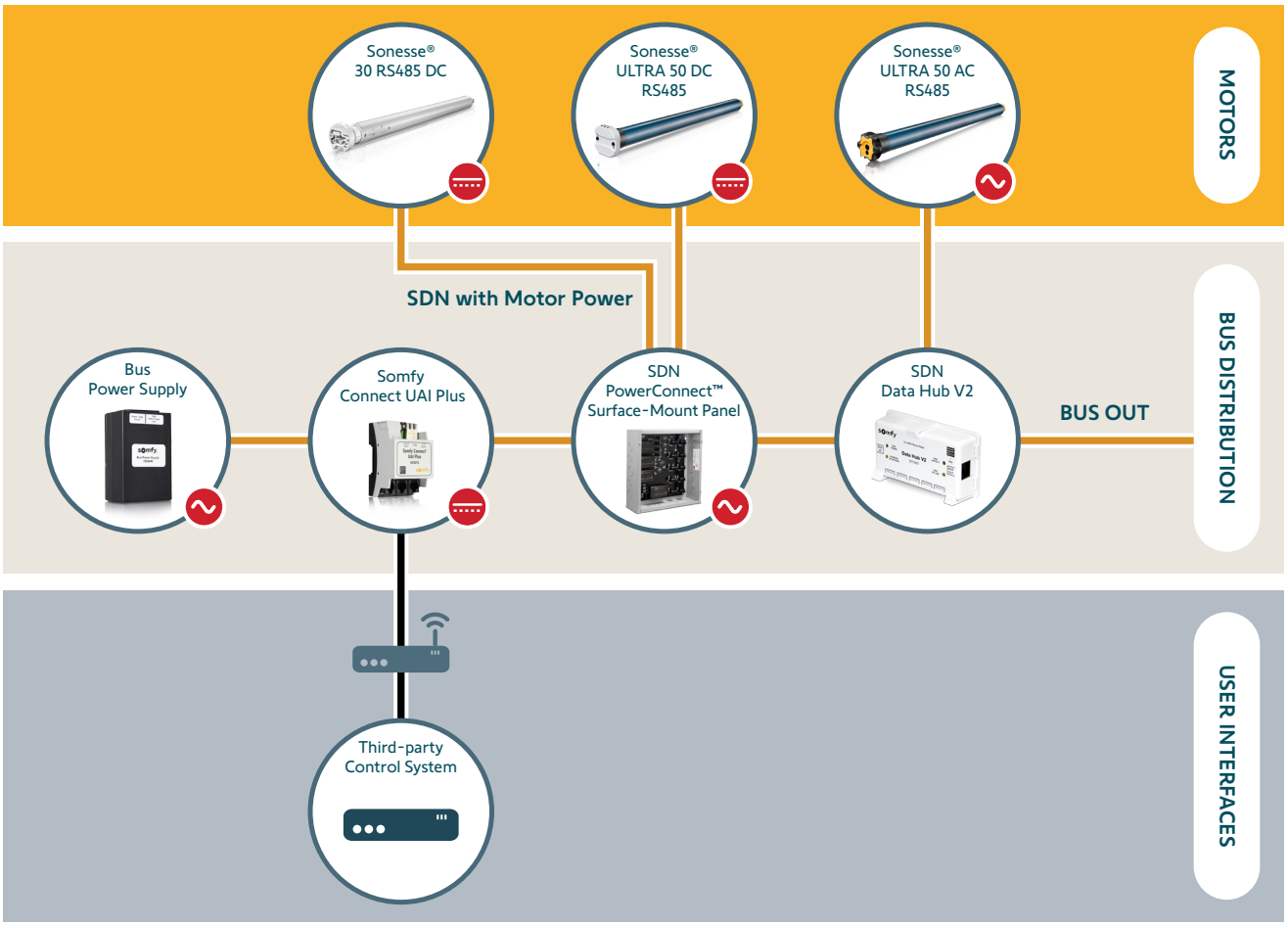

© Somfy Systems, Inc. • **JANUARY 2025**