ROLLEASE® STANDARD

Standard Bracket Components

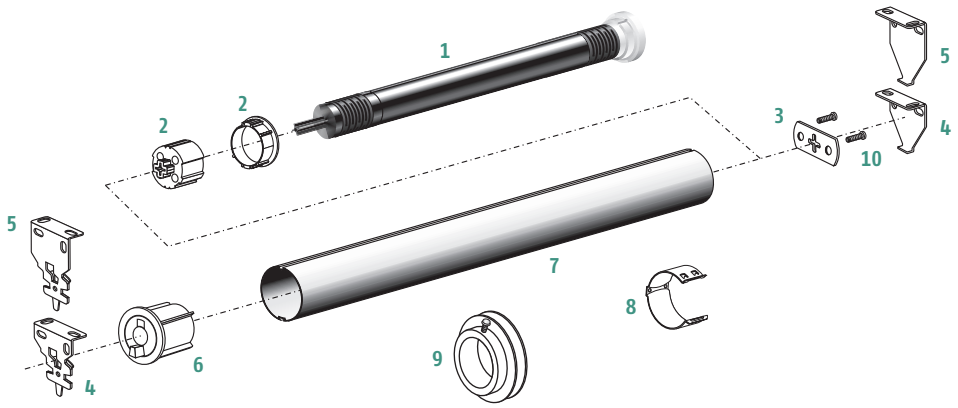

Dimensions and Light Gap Specifications

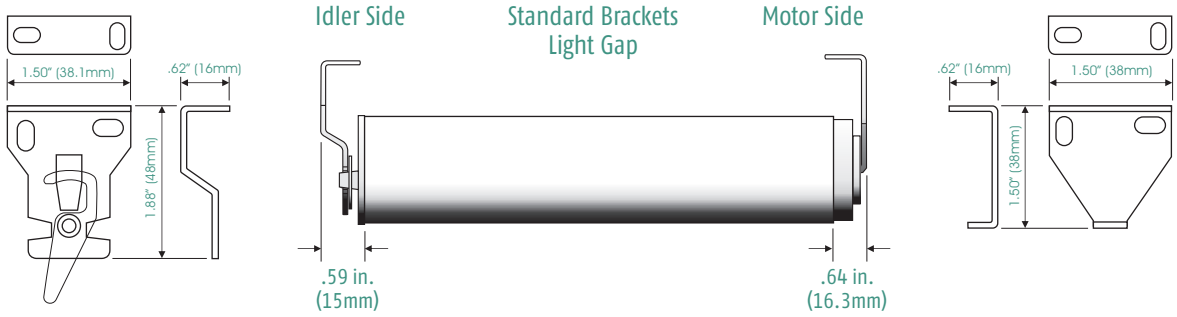

IMAGE	DESCRIPTION	CATALOG NUMBER
1	SONESSE™ 30 MOTOR	SEE PAGES 2 & 3
2	CROWN AND DRIVE FOR ROLLEASE® 1.5" TUBE	9013775
3	MOTOR ADAPTER PLATE FOR ROLLEASE R8 BRACKET WITH SCREWS	9014073
4	ROLLEASE® R8 SERIES BRACKETS 1.5"	CONTACT ROLLEASE
5	ROLLEASE® R8 SERIES BRACKETS 2"	CONTACT ROLLEASE
6	ROLLEASE® R8 1.5" IDLER END PLUG	CONTACT ROLLEASE
7	ROLLEASE® 1.5" TUBE	CONTACT ROLLEASE
8	CORD CLIPS FOR ROMAN SHADE APPLICATIONS	9012200
9	TAKE-UP REEL - ROLLEASE 1.5" TUBE	1780786
10	M3.5 x 9MM SCREWS	9014066

Solar/Roller Shades

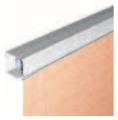

Roman/Woven Shades



Sheer Horizontal Shades

