Irismo™ 35 Mini DC
Technical Specifications

Motor part numbers

Irismo™ 35 Mini DC RTS	Part# 1003004
Irismo™ 35 Mini DC DCT	Part# 1003003

Features overview

	Irismo™ 35 RTS	Irismo™ 35 DCT
Motor unit main features		
Soft start	✓	✓
Soft stop	✓	✓
Manual operation	✓	✓
Automatic limits on end stop	✓	✓
Intermediate position	✓	✓
Touch motion with 2 sensitivity settings	✓	✓
Adjustable limits	✓	✓
Speed control & adjustment	✓	✓
Control options		
Dry Contact input via RJ12 connector	✓	✓
Radio Technology Somfy® RTS	✓	
Tandem alternative	✓	✓
SDN RS485 digital technology (one-way communication)	✓	✓
Zigbee® (one-way communication)		
Timed events via app	✓	✓
Installation and setting features		
Programming with DCT Setting Tool (preferred)	✓	✓
LED indicators	✓	✓
Motor unit direction change	✓	✓
Factory reset	✓	✓
Inverse mounting (top mount)	✓	✓
Tracks/Drapery Types		
One-way opening	✓	✓
Center opening	✓	✓
Asymmetric	✓	✓
Multiple	✓	✓
Pinch pleat	✓	✓
Ripplefold® with overlap arm	✓	✓
Ripplefold® with butt arm	✓	✓
Accordia®	✓	✓

Motorized track main characteristics

	Irismo™ 35 RTS	Irismo™ 35 DCT
Power Supply	24V DC	
Power adaptor amperage	2 A	
Adjustable nominal speed	4.9 in./s - 7.86 in./s 12.5 cm/s - 20 cm/s	
Power consumption	<3W (standby)	
Power adaptor cable length	13.2 ft. (4 m)	
Control connector type	RJ12	
DCT control circuit voltage	5V DC	
Motor sound level	<44 dBA	
Certifications	CE	
Track maximum length	32 ft. (9.7 m)	
Maximum number of splices	2	
Minimum bending radius	11.8 in. (30 cm)	
Minimum curving radius	118 in. (300 cm)	
Side opening max weight	77 lbs. (35 kg)	
Center opening max weight	77 lbs. (35 kg)	
Tandem alternative (see pages 23, 24, 26)	154 lbs. (70 kg)	

Motor dimensions

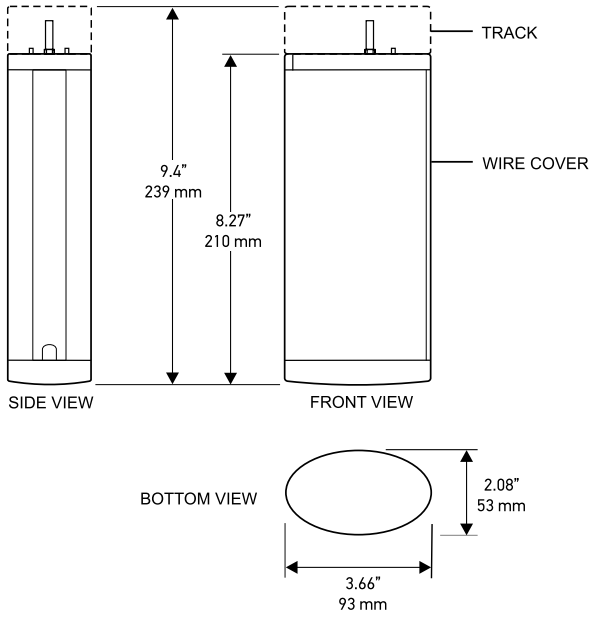

© Somfy Systems, Inc. • **JUNE 2026**

www.somfypro.com