To supported Drapery Motors:
- Irismo 35 (Mini DC) DCT
- Irismo 35 (Mini DC) RTS

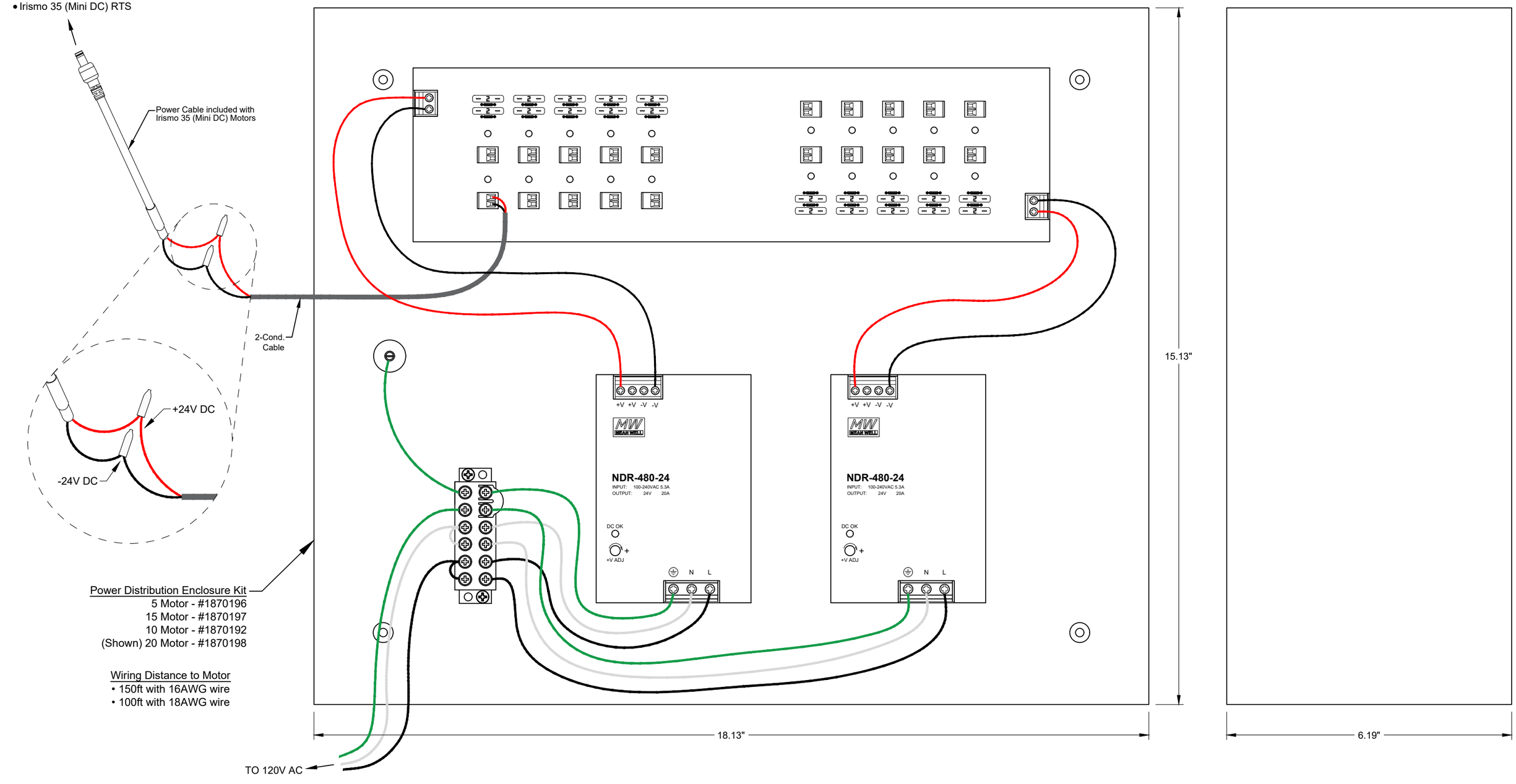

© 2015 Somfy Systems, Inc. All Rights Reserved. This drawing is the property of Somfy Systems, Inc.. The graphics, information and specific ideas in this document are the exclusive property of Somfy Systems, Inc. and must not be made public, copied, or sold. Others seeking permission to reproduce this document, in whole or in part, must obtain permission from Somfy Systems, Inc. in writing.

Tel: 1-800-64-SOMFY
Fax: 1-609-495-8165
www.somfysystems.com

Date:	06/20/24
Print Size:	11" x 17"
NTS:	NTS
Sales:	N/A
Drawn by:	RV
Checked by:	PK

Revisions

Rev	Date	By	Description
-	--/--/--	-	
-	--/--/--	-	
-	--/--/--	-	
-	--/--/--	-	
-	--/--/--	-	

Dwg Title: Irismo to Power Distribution Enclosure Kit Wire Detail

Dwg No.: PDEK-WIRING-04

Project name: Technical Library

Client: Somfy Systems

Address: 121 Herrod Boulevard, Dayton, NJ 08810